VIQY1

(Y510)

NM_A032 Rev1.0 Schematic

Intel Haswell Processor with DDRIII + Lynx point PCH
nVIDIA N14P GT + 2nd VGA N14P GT

2013-03-19 Rev1.0

Security Classification	LC Future Center Secret Data		
Issued Date	2012/07/01	Deciphered Date	2014/07/01

THIS SHEET OF ENGINEERING DRAWING IS THE PROPRIETARY PROPERTY OF LC FUTURE CENTER. AND CONTAINS CONFIDENTIAL AND TRADE SECRET INFORMATION. THIS SHEET MAY NOT BE TRANSFERED FROM THE CUSTODY OF THE COMPETENT DIVISION OF R&D DEPARTMENT EXCEPT AS AUTHORIZED BY LC FUTURE CENTER NEITHER THIS SHEET NOR THE INFORMATION IT CONTAINS MAY BE USED BY OR DISCLOSED TO ANY THIRD PARTY WITHOUT PRIOR WRITTEN CONSENT OF LC FUTURE CENTER.

Title: Cover Page

Size: Custom | Document Number: Y510 NM-A032 | Rev: 1.0

Date: Wednesday, March 27, 2013 | Sheet 1 of 69

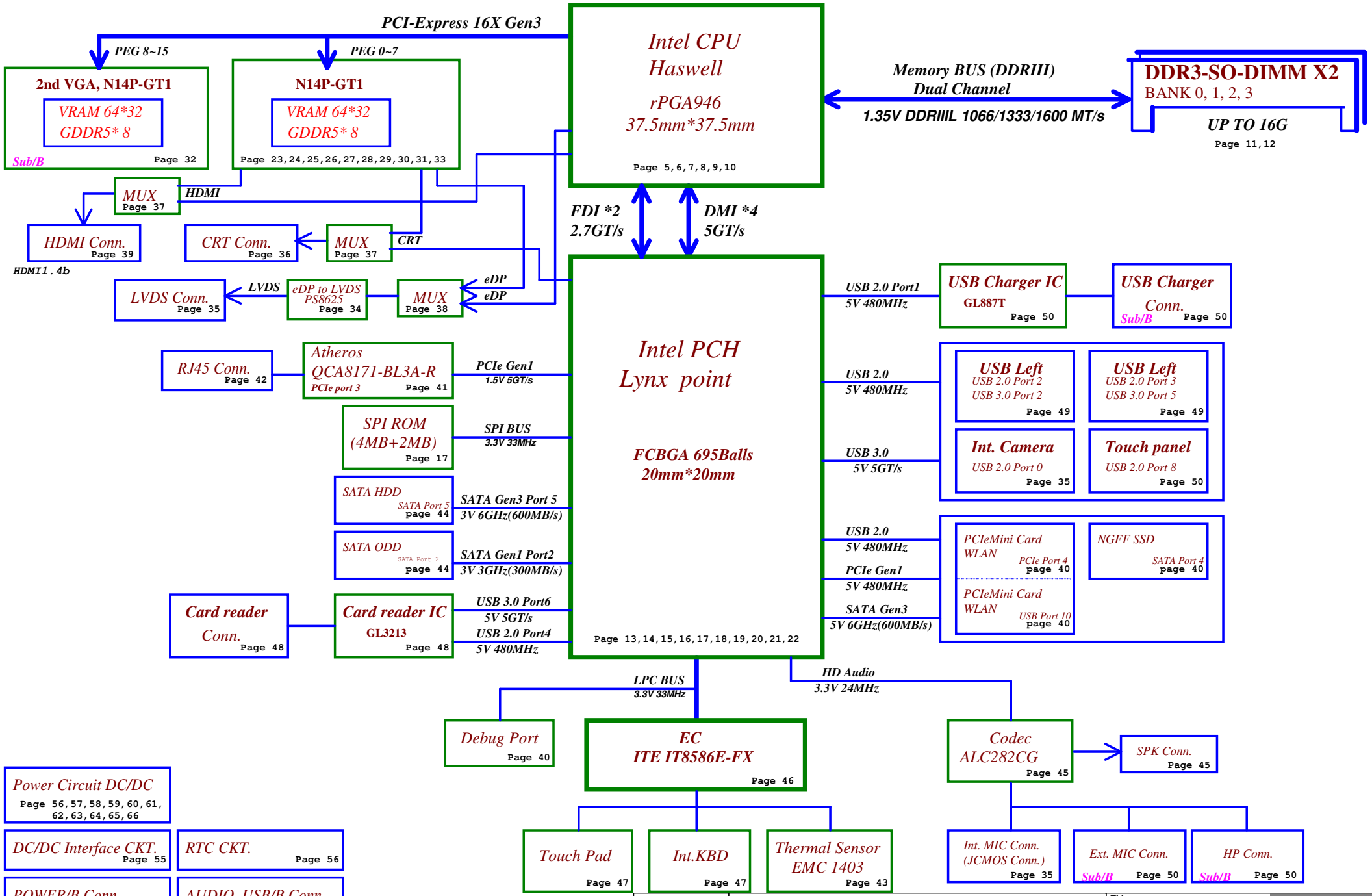

Security Classification	LC Future Center Secret Data		
Issued Date	2012/07/01	Deciphered Date	2014/07/01

THIS SHEET OF ENGINEERING DRAWING IS THE PROPRIETARY PROPERTY OF LC FUTURE CENTER. AND CONTAINS CONFIDENTIAL AND TRADE SECRET INFORMATION. THIS SHEET MAY NOT BE TRANSFERED FROM THE CUSTODY OF THE COMPETENT DIVISION OF R&D DEPARTMENT EXCEPT AS AUTHORIZED BY LC FUTURE CENTER NEITHER THIS SHEET NOR THE INFORMATION IT CONTAINS MAY BE USED BY OR DISCLOSED TO ANY THIRD PARTY WITHOUT PRIOR WRITTEN CONSENT OF LC FUTURE CENTER.

Title: **Block Diagram**

LCFC

Size	Document Number	Rev
Custom	Y501 NM-A032	1.0

Date: Wednesday, March 27, 2013 | Sheet 2 of 69

WWW.AliSaler.Com

Voltage Rails (O --> Means ON , X --> Means OFF)

Power Plane / State	B+	+3VALW +5VALW	+1.5V	+5VS +3VS +1.5VS +VCCSA +V1.5S_VCCP +CPU_CORE +VGA_CORE +GFX_CORE +1.8VS +1.05VS +0.75VS +3.3VS_VGA +1.5VS_VGA +1.05VS_VGA
S0	O	O	O	O
S3	O	O	O	X
S5 S4/AC Only	O	O	X	X
S5 S4 Battery only	O	X	X	X
S5 S4 AC & Battery don't exist	X	X	X	X

STATE \ SIGNAL	SLP_S1#	SLP_S3#	SLP_S4#	SLP_S5#	+VALW	+V	+VS	Clock
Full ON	HIGH	HIGH	HIGH	HIGH	ON	ON	ON	ON
S1(Power On Suspend)	LOW	HIGH	HIGH	HIGH	ON	ON	ON	LOW
S3 (Suspend to RAM)	LOW	LOW	HIGH	HIGH	ON	ON	OFF	OFF
S4 (Suspend to Disk)	LOW	LOW	LOW	HIGH	ON	OFF	OFF	OFF
S5 (Soft OFF)	LOW	LOW	LOW	LOW	ON	OFF	OFF	OFF

USB Port Table

USB 2.0	USB 3.0		Port	4 External USB Port
EHCI1	XHCI		0	Camera
			1	USB Port (Right Side)
		2	2	USB Port (Left Side)
		5	3	USB Port (Left Side)
		6	4	Card Reader
			5	
			6	
			7	
EHCI2			8	Touch panel
			9	
			10	Mini Card(WLAN)
			11	
			12	
			13	

BOM Structure Table

BOM Structure	BTO Item
GT@	NV GT750M
GT1@	NV GT755M
CMOS@	CMOS Camera part
SURGE@	QCA8171 LAN surge part
X76@	X76 Level part for VRAM
GC6@	NV CG6 support part
NOGC6@	NV no CG6 support part
AOAC@	AOAC support part
KBL@	K/B Light part
ME@	ME part
@	Unpop
DS3@	Deep S3 support part
daul@	Support daul channel panel function
887T@	GENESYS 887T USB charger solution
887@	GENESYS 887 USB charger solution
TI@	TI USB charger solution
EDP@	Support EDP panel function
SLI@	For SLI function part
47W@	For 47W CPU part
37W@	For 37W CPU part

SMBUS Control Table

	SOURCE	Main VGA	2nd VGA	BATT	IT8580E	SODIMM	WLAN WiMAX	Thermal Sensor	PCH	TP Module
EC_SMB_CK1 EC_SMB_DA1	IT8580E +3VALW	X	X	V +3VALW	X	X	X	X	X	X
EC_SMB_CK2 EC_SMB_DA2	IT8580E +3VS	V +3VS	V +3VS	X	X	X	X	V +3VS	V +3V_PCH	X
SMB_CLK_S3 SMB_DATA_S3	PCH +3VS	X	X	X	X	V +3VS	V +3VS	X	V +3V_PCH	V +3VS

PCIE PORT LIST

Port	Device
1	
2	
3	
4	LAN
5	WLAN
6	
7	
8	

EC SM Bus1 address

Device	Address
Smart Battery	0001 011X b

EC SM Bus2 address

Device	Address
Thermal Sensor EMC1403-2	1001_101xb
Master VGA	0x9E
Slave VGA	0x9C

PCH SM Bus address

Device	Address
DDR DIMM0	1001 000Xb
DDR DIMM2	1001 010Xb

ZZZ1

DAZ0SF00100

Security Classification	LC Future Center Secret Data		
Issued Date	2012/07/01	Deciphered Date	2014/07/01

THIS SHEET OF ENGINEERING DRAWING IS THE PROPRIETARY PROPERTY OF LC FUTURE CENTER. AND CONTAINS CONFIDENTIAL AND TRADE SECRET INFORMATION. THIS SHEET MAY NOT BE TRANSFERED FROM THE CUSTODY OF THE COMPETENT DIVISION OF R&D DEPARTMENT EXCEPT AS AUTHORIZED BY LC FUTURE CENTER NEITHER THIS SHEET NOR THE INFORMATION IT CONTAINS MAY BE USED BY OR DISCLOSED TO ANY THIRD PARTY WITHOUT PRIOR WRITTEN CONSENT OF LC FUTURE CENTER.

Title: Notes List

LCFC

Size: Custom | Document Number: Y501 NM-A032 | Rev: 1.0

Date: Wednesday, March 27, 2013 | Sheet 3 of 69

Hot plug detect for IFP link E

VGA and GDDR5 Voltage Rails (N14Px GPIO)

GPIO	I/O	ACTIVE	Function Description
GPIO0	IN	-	FB_CLAMP_MON
GPIO1	OUT	-	NA
GPIO2	OUT	-	VGA_BL_PWM
GPIO3	OUT	-	VGA_ENVDD
GPIO4	OUT	-	VGA_ENBKL
GPIO5	OUT	-	NA
GPIO6	OUT	-	FB_CLAMP_TOGGLE_REQ#
GPIO7	OUT	-	NA
GPIO8	OUT	-	OVERT#
GPIO9	OUT	-	VGA_ALERT#
GPIO10	OUT	-	Memory VREF Control
GPIO11	OUT	-	NVVDD PWM_VID
GPIO12	IN	-	AC Power Detect Input (10K pull High)
GPIO13	OUT	-	DPRSLPVR_VGA
GPIO14	OUT	-	NA
GPIO15	IN	-	NA
GPIO16	OUT	-	NA
GPIO17	IN	-	VGA_EDP_HPD
GPIO18	IN	-	DGPU_HDMI_HPD
GPIO19	IN	-	NA

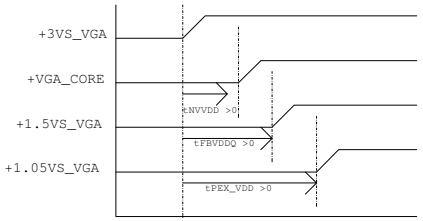

1. all power rail ramp up time should be larger than 40us

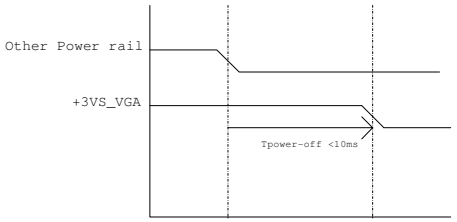

1.all GPU power rails should be turned off within 10ms
2. Optimus system VDD33 avoids drop down earlier than NVDD and FBVDDQ

Performance Mode P0 TDP at Tj = 102 C* (GDDR5)

Products	GPU (4)	Mem (1,5)	NVCLK /MCLK	NVVDD			FBVDD (1.35V)		FBVDDQ (GPU+Mem) (1.35V)		PCI Express (1.05V) (6)		I/O and PLLVDD (1.8V)		I/O and PLLVDD (1.05V)		Other (3.3V)	
	(W)	(W)	(MHz)	(V)	(A)	(W)	(A)	(W)	(A)	(W)	(mA)	(W)	(mA)	(W)	(mA)	(W)	(mA)	(W)
N14X 128bit 1GB GDDR5	TBD	TBD	TBD	TBD	TBD	TBD	TBD	TBD	TBD	TBD	TBD	TBD	TBD	TBD	TBD	TBD	TBD	TBD

Physical Strapping pin	Power Rail	Logical Strapping Bit3	Logical Strapping Bit2	Logical Strapping Bit1	Logical Strapping Bit0
ROM_SCLK	+3VS_VGA	PCI_DEVID[4]	SUB_VENDOR	SLOT_CLK_CFG	PEX_PLL_EN_TERM
ROM_SI	+3VS_VGA	RAM_CFG[3]	RAM_CFG[2]	RAM_CFG[1]	RAM_CFG[0]
ROM_SO	+3VS_VGA	FB[1]	FB[0]	SMB_ALT_ADDR	VGA_DEVICE
STRAP0	+3VS_VGA	USER[3]	USER[2]	USER[1]	USER[0]
STRAP1	+3VS_VGA	3GIO_PAD_CFG_ADR[3]	3GIO_PAD_CFG_ADR[2]	3GIO_PAD_CFG_ADR[1]	3GIO_PAD_CFG_ADR[0]
STRAP2	+3VS_VGA	PCI_DEVID[3]	PCI_DEVID[2]	PCI_DEVID[1]	PCI_DEVID[0]
STRAP3	+3VS_VGA	SOR3_EXPOSED	SOR2_EXPOSED	SOR1_EXPOSED	SOR0_EXPOSED
STRAP4	+3VS_VGA	RESERVED	PCIE_SPEED_ CHANGE_GEN3	PCIE_MAX_SPEED	DP_PLL_VDD33V

	Device ID
N13P-GT (28nm)	0x0FCD

	setting	I2C Slave addrees ID
SMB_ALT_ADDR (ROM_SO Bit 1)	0	0x9E
	1	0x9C

GPU	ROM_SO	ROM_SCLK	STRAP0	STRAP1	STRAP2	STRAP3	STRAP4	
N14P-GT 28nm	PU 10K	PD 15K	PU 45K	PD 5K	PD 25K	PU 5K	PD 45K	Master
	PU 20K	PU 25K	PU 45K	PD 35K	PD 10K	PD 5K	PD 10K	Slave

GPU		N14P-GT	N14P-GT1	
FB Memory (GDDR5)		ROM_SI	ROM_SI	
Samsung 3000MHz	K4G20325FD-FC03			
	64Mx32		PD 30K	
Hynix 3000MHz	H5GQ2H24AFR-R0C			
	64Mx32		PD 25K	
Samsung 2500MHz	K4G20325FD-FC04			
	64Mx32	PD 30K		
Hynix 2500MHz	H5GQ2H24AFR-T2C			
	64Mx32	PD 25K		

Security Classification	LC Future Center Secret Data		
Issued Date	2012/07/01	Deciphered Date	2014/07/01

THIS SHEET OF ENGINEERING DRAWING IS THE PROPRIETARY PROPERTY OF LC FUTURE CENTER. AND CONTAINS CONFIDENTIAL AND TRADE SECRET INFORMATION. THIS SHEET MAY NOT BE TRANSFERED FROM THE CUSTODY OF THE COMPETENT DIVISION OF R&D DEPARTMENT EXCEPT AS AUTHORIZED BY LC FUTURE CENTER NEITHER THIS SHEET NOR THE INFORMATION IT CONTAINS MAY BE USED BY OR DISCLOSED TO ANY THIRD PARTY WITHOUT PRIOR WRITTEN CONSENT OF LC FUTURE CENTER.

Title: VGA Notes List

Size: Custom | Document Number: Y501 NM-A032 | Rev: 1.0

Date: Wednesday, March 27, 2013 | Sheet 4 of 69

WWW.AliSaler.Com

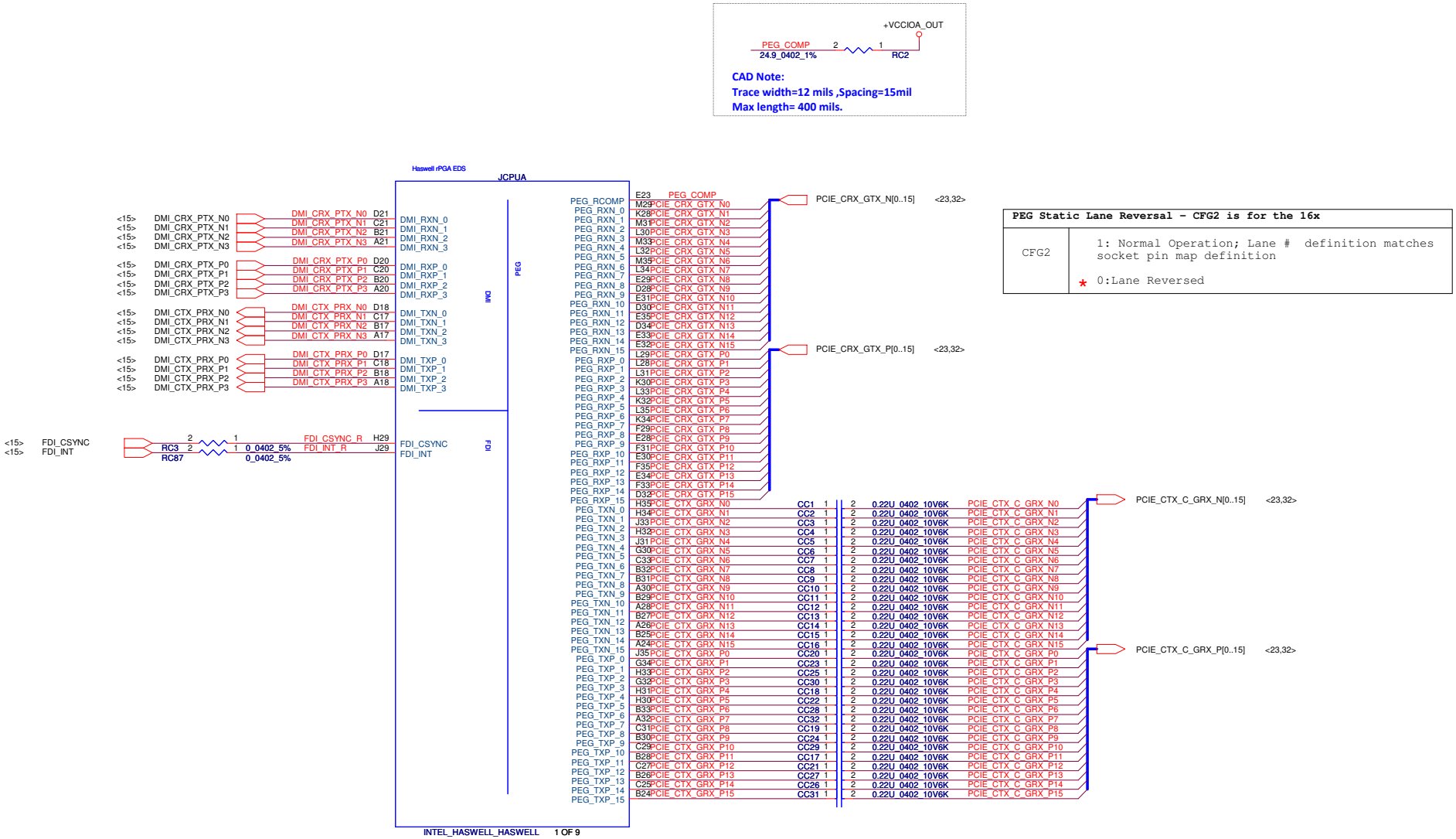

PEG Static Lane Reversal - CFG2 is for the 16x	
CFG2	1: Normal Operation; Lane # definition matches socket pin map definition * 0:Lane Reversed

Security Classification	LC Future Center Secret Data		
Issued Date	2012/07/01	Deciphered Date	2014/07/01

THIS SHEET OF ENGINEERING DRAWING IS THE PROPRIETARY PROPERTY OF LC FUTURE CENTER. AND CONTAINS CONFIDENTIAL AND TRADE SECRET INFORMATION. THIS SHEET MAY NOT BE TRANSFERED FROM THE CUSTODY OF THE COMPETENT DIVISION OF R&D DEPARTMENT EXCEPT AS AUTHORIZED BY LC FUTURE CENTER NEITHER THIS SHEET NOR THE INFORMATION IT CONTAINS MAY BE USED BY OR DISCLOSED TO ANY THIRD PARTY WITHOUT PRIOR WRITTEN CONSENT OF LC FUTURE CENTER.

Title: CPU (1/7) DMI, FDI, PEG

Size: Custom | Document Number: Y501 NM-A032 | Rev: 0.1

Date: Wednesday, March 20, 2013 | Sheet 5 of 69

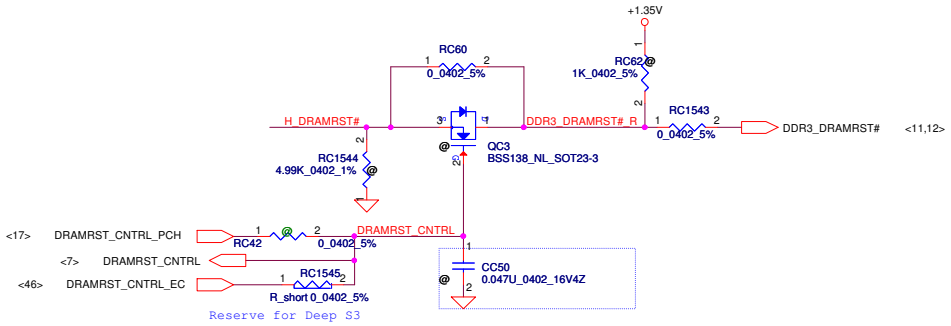

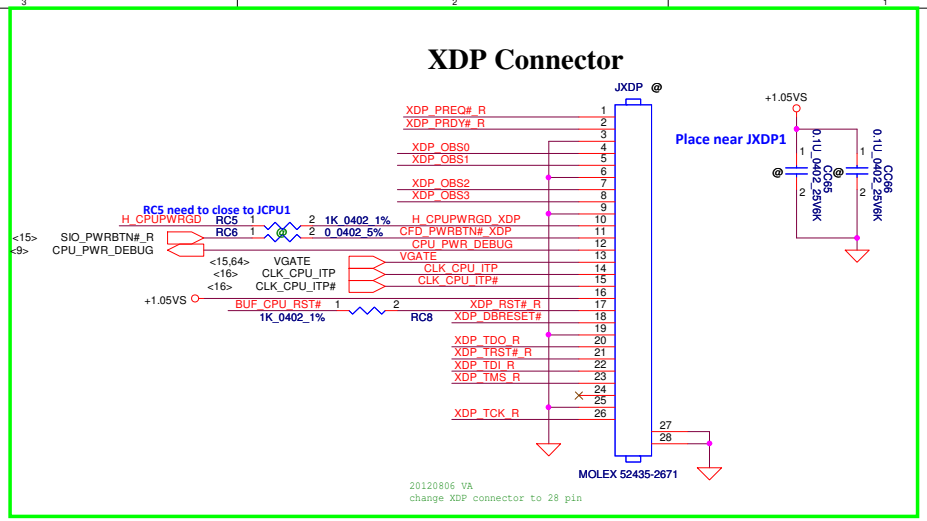

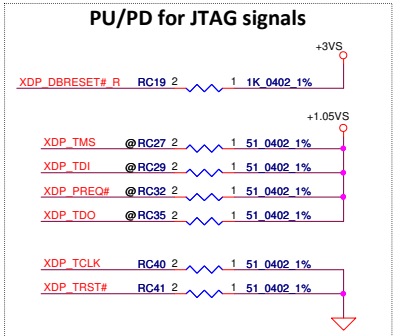

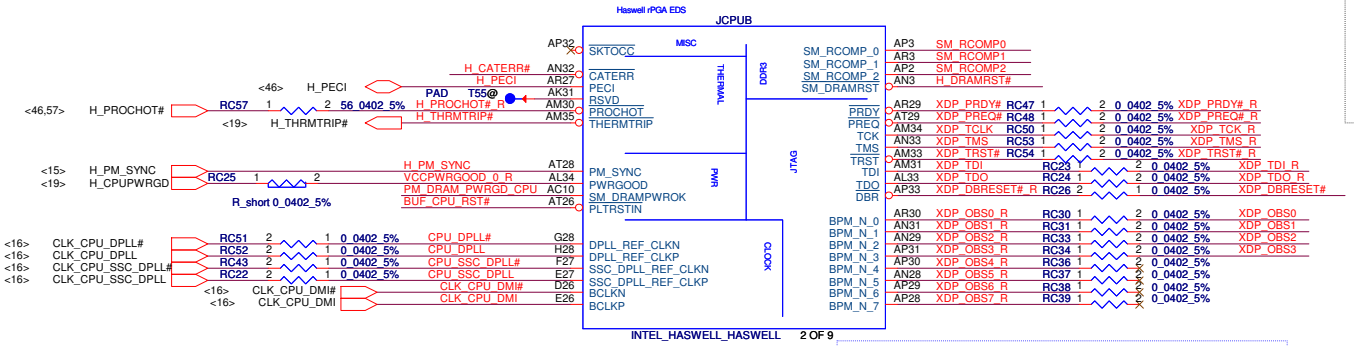

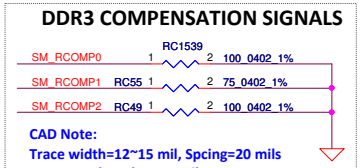

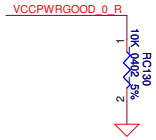

CAD Note:
Avoid stub in the PWRGD path
while placing resistors RC25 & RC130

SM_DRAMPWROK with DDR Power Gating Topology

497750_497750_SHRKBY_MBL_SCH_CHKLST 0.5
page19 item 3.6 SM_DRAMPWROK

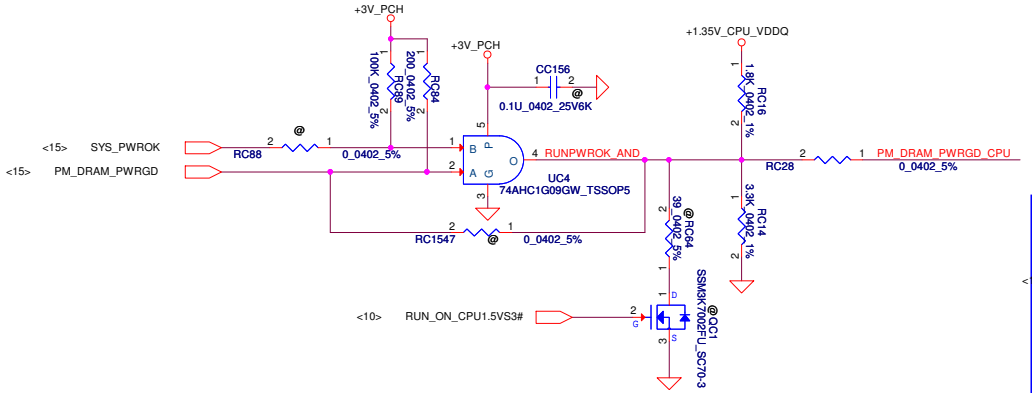

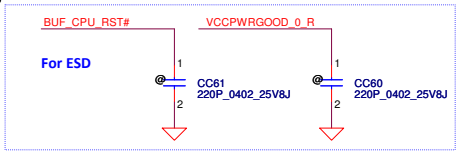

Buffered Reset to CPU

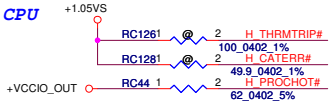

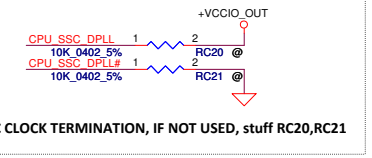

1.05V

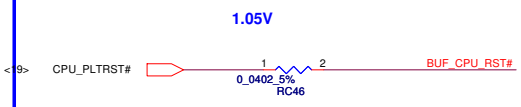

Security Classification	LC Future Center Secret Data		
Issued Date	2012/07/01	Deciphered Date	2014/07/01

THIS SHEET OF ENGINEERING DRAWING IS THE PROPRIETARY PROPERTY OF LC FUTURE CENTER. AND CONTAINS CONFIDENTIAL AND TRADE SECRET INFORMATION. THIS SHEET MAY NOT BE TRANSFERED FROM THE CUSTODY OF THE COMPETENT DIVISION OF R&D DEPARTMENT EXCEPT AS AUTHORIZED BY LC FUTURE CENTER NEITHER THIS SHEET NOR THE INFORMATION IT CONTAINS MAY BE USED BY OR DISCLOSED TO ANY THIRD PARTY WITHOUT PRIOR WRITTEN CONSENT OF LC FUTURE CENTER.

Title: CPU (2/7) PM, XDP, CLK

Size: Custom | Document Number: Y501 NM-A032 | Rev: 1.0

Date: Wednesday, March 27, 2013 | Sheet 6 of 69

WWW.AliSaler.Com

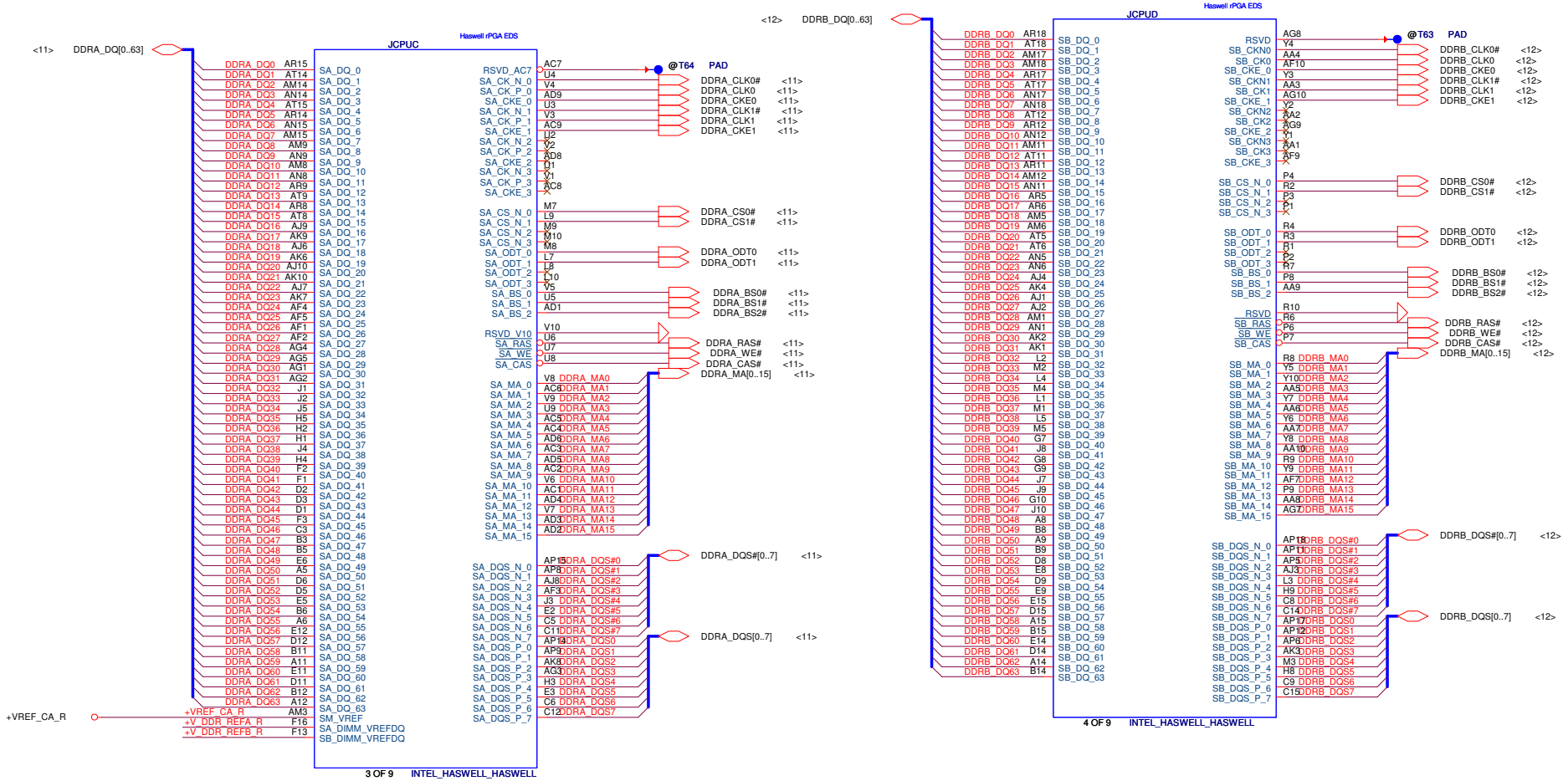

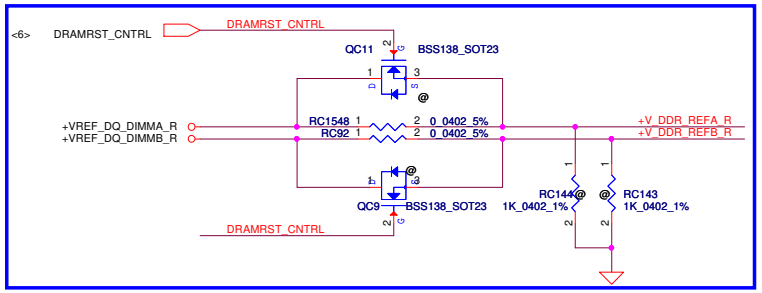

6/8: Add M3 Circuit (Processor Generated SO-DIMM VREF_DQ)

Security Classification	LC Future Center Secret Data		
Issued Date	2012/07/01	Deciphered Date	2014/07/01

THIS SHEET OF ENGINEERING DRAWING IS THE PROPRIETARY PROPERTY OF LC FUTURE CENTER. AND CONTAINS CONFIDENTIAL AND TRADE SECRET INFORMATION. THIS SHEET MAY NOT BE TRANSFERED FROM THE CUSTODY OF THE COMPETENT DIVISION OF R&D DEPARTMENT EXCEPT AS AUTHORIZED BY LC FUTURE CENTER NEITHER THIS SHEET NOR THE INFORMATION IT CONTAINS MAY BE USED BY OR DISCLOSED TO ANY THIRD PARTY WITHOUT PRIOR WRITTEN CONSENT OF LC FUTURE CENTER.

Title: **CPU (3/7) DDRIII**

Size: Custom | Document Number: Y501 NM-A032 | Rev: 1.0

Date: Wednesday, March 27, 2013 | Sheet 7 of 69

CFG STRAPS for CPU

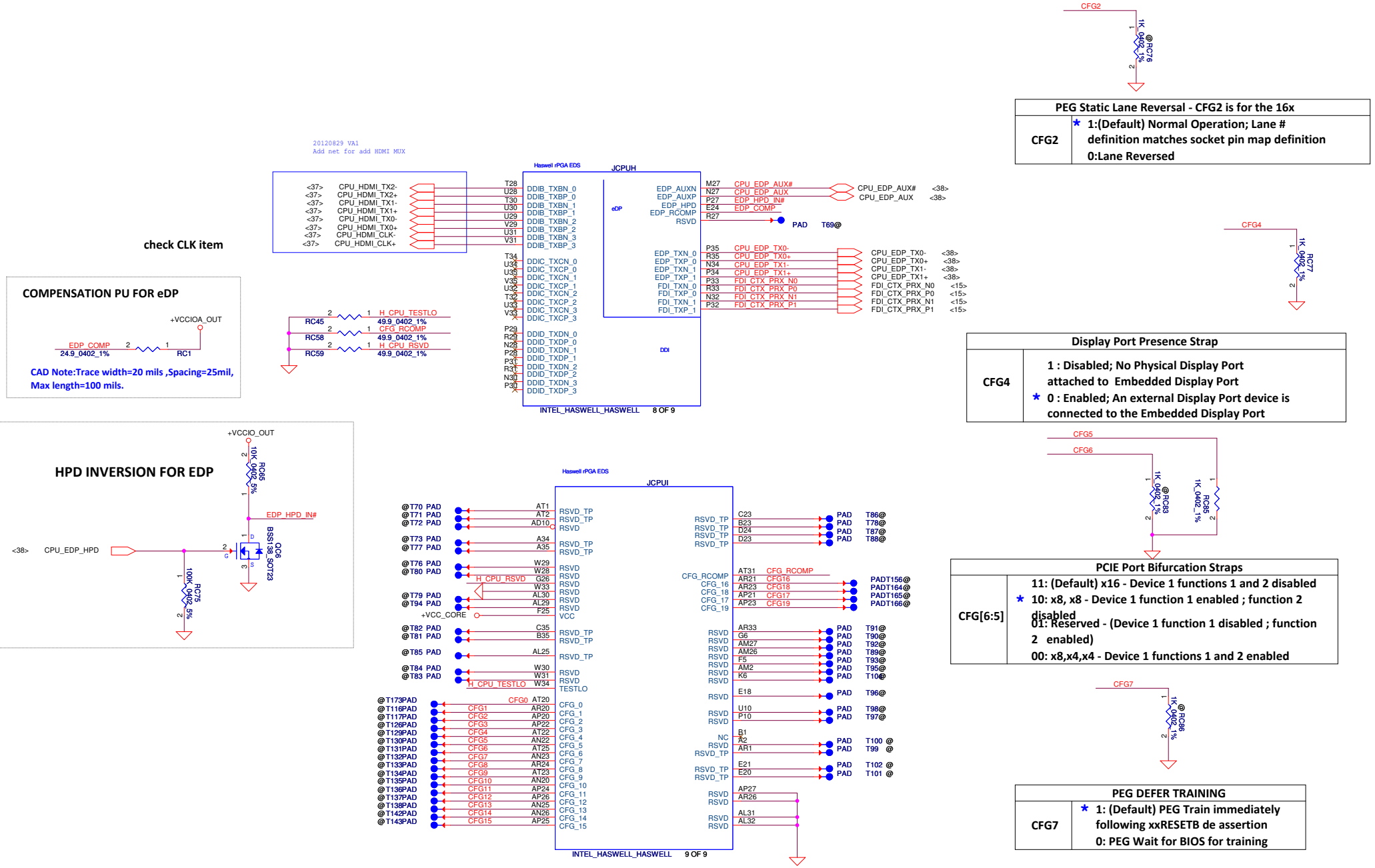

Security Classification	LC Future Center Secret Data		
Issued Date	2012/07/01	Deciphered Date	2014/07/01

THIS SHEET OF ENGINEERING DRAWING IS THE PROPRIETARY PROPERTY OF LC FUTURE CENTER. AND CONTAINS CONFIDENTIAL AND TRADE SECRET INFORMATION. THIS SHEET MAY NOT BE TRANSFERED FROM THE CUSTODY OF THE COMPETENT DIVISION OF R&D DEPARTMENT EXCEPT AS AUTHORIZED BY LC FUTURE CENTER NEITHER THIS SHEET NOR THE INFORMATION IT CONTAINS MAY BE USED BY OR DISCLOSED TO ANY THIRD PARTY WITHOUT PRIOR WRITTEN CONSENT OF LC FUTURE CENTER.

Title: CPU (4/7) RSVD,CFG

Size: Custom | Document Number: Y501 NM-A032 | Rev 1.0

Date: Wednesday, March 27, 2013 | Sheet 8 of 69

WWW.AliSaler.Com

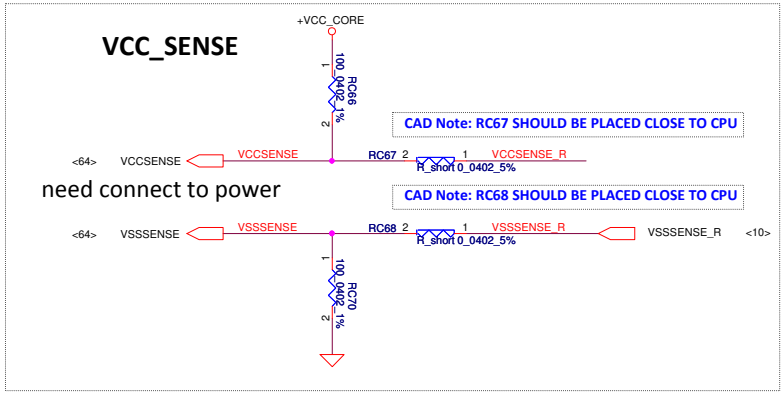

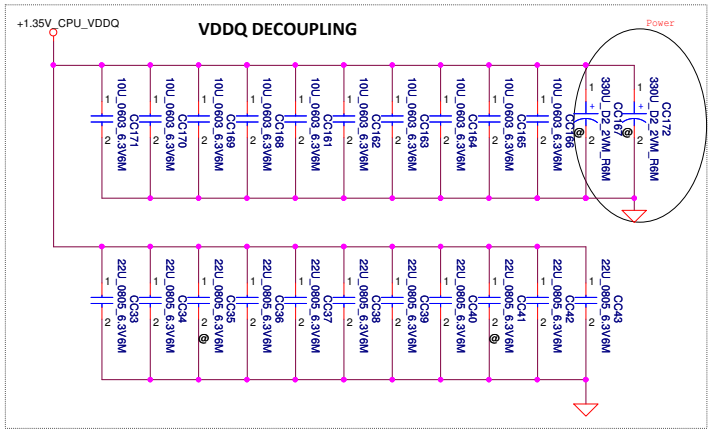

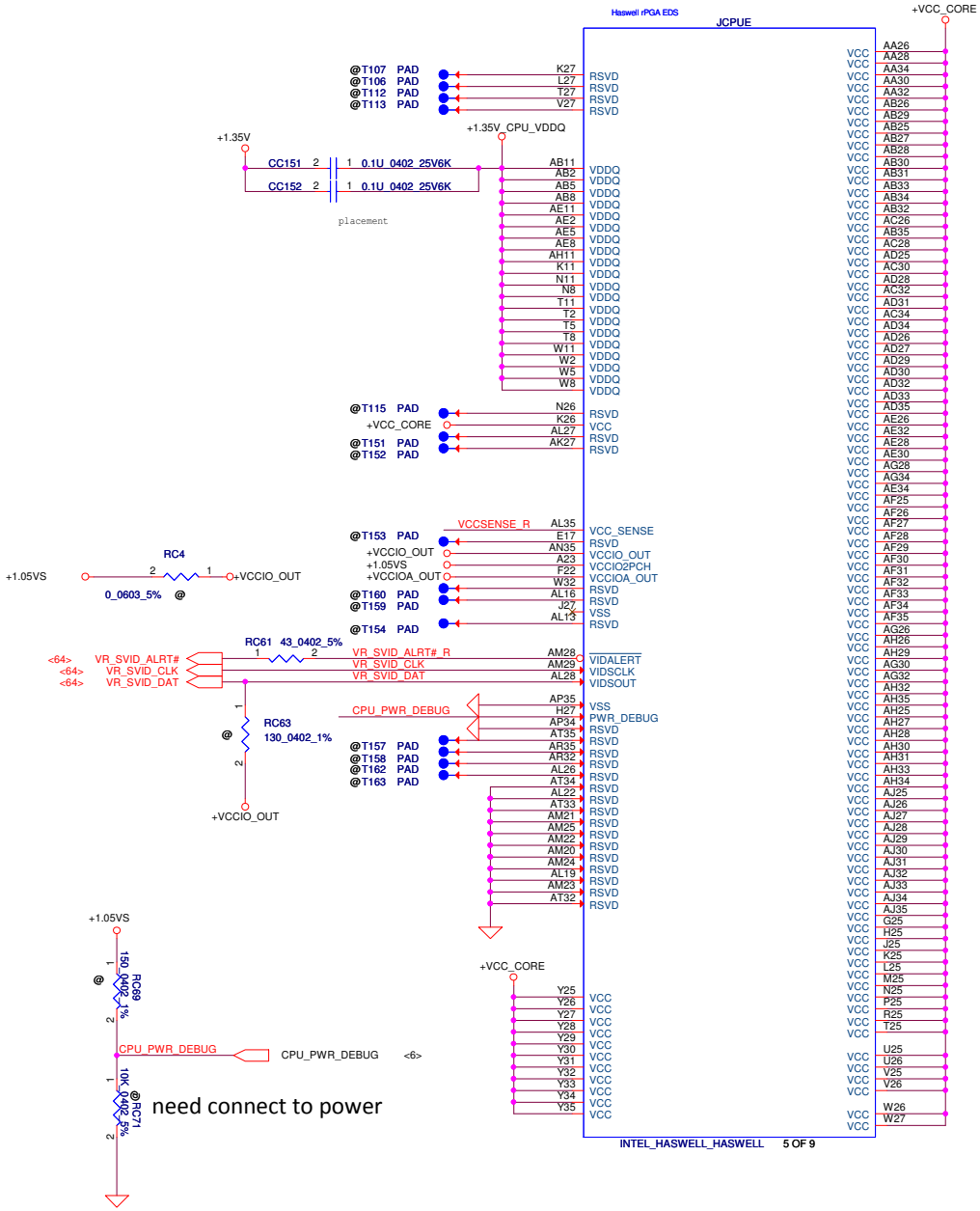

Security Classification	LC Future Center Secret Data		
Issued Date	2012/07/01	Deciphered Date	2014/07/01

THIS SHEET OF ENGINEERING DRAWING IS THE PROPRIETARY PROPERTY OF LC FUTURE CENTER. AND CONTAINS CONFIDENTIAL AND TRADE SECRET INFORMATION. THIS SHEET MAY NOT BE TRANSFERED FROM THE CUSTODY OF THE COMPETENT DIVISION OF R&D DEPARTMENT EXCEPT AS AUTHORIZED BY LC FUTURE CENTER NEITHER THIS SHEET NOR THE INFORMATION IT CONTAINS MAY BE USED BY OR DISCLOSED TO ANY THIRD PARTY WITHOUT PRIOR WRITTEN CONSENT OF LC FUTURE CENTER.

Title: **CPU (5/7) PWR, BYPASS**

LCFC

Size: Custom | Document Number: Y501 NM-A032 | Rev: 1.0

Date: Wednesday, March 27, 2013 | Sheet 9 of 69

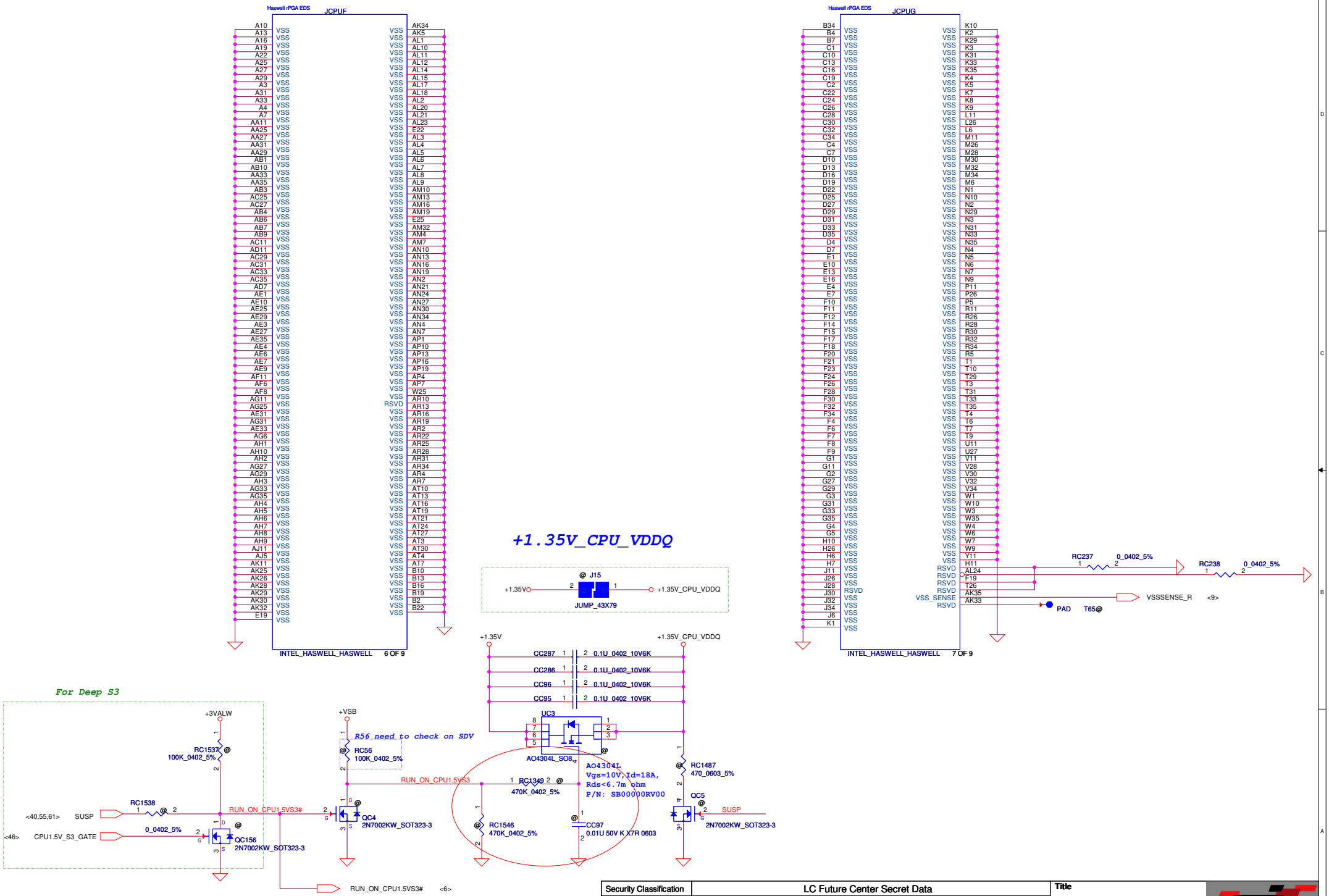

Security Classification	LC Future Center Secret Data		
Issued Date	2012/07/01	Deciphered Date	2014/07/01

THIS SHEET OF ENGINEERING DRAWING IS THE PROPRIETARY PROPERTY OF LC FUTURE CENTER. AND CONTAINS CONFIDENTIAL AND TRADE SECRET INFORMATION. THIS SHEET MAY NOT BE TRANSFERED FROM THE CUSTODY OF THE COMPETENT DIVISION OF R&D DEPARTMENT EXCEPT AS AUTHORIZED BY LC FUTURE CENTER NEITHER THIS SHEET NOR THE INFORMATION IT CONTAINS MAY BE USED BY OR DISCLOSED TO ANY THIRD PARTY WITHOUT PRIOR WRITTEN CONSENT OF LC FUTURE CENTER.

Title: CPU (6/7) PWR

Size: Custom | Document Number: Y501 NM-A032 | Rev: 1.0

Date: Wednesday, March 27, 2013 | Sheet 10 of 69

WWW.AliSaler.Com

DDR3 SO-DIMM A

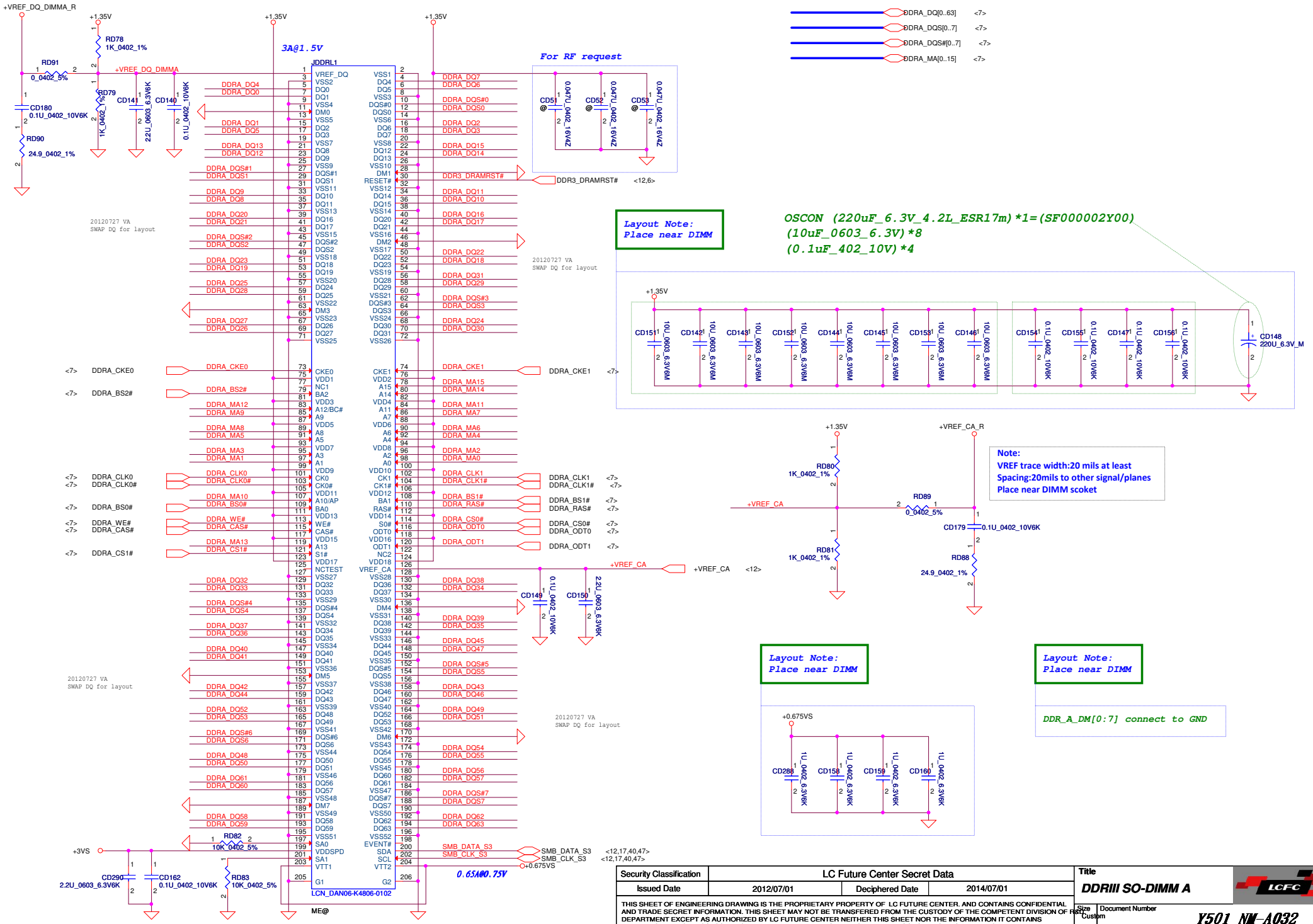

Security Classification	LC Future Center Secret Data		
Issued Date	2012/07/01	Deciphered Date	2014/07/01

THIS SHEET OF ENGINEERING DRAWING IS THE PROPRIETARY PROPERTY OF LC FUTURE CENTER. AND CONTAINS CONFIDENTIAL AND TRADE SECRET INFORMATION. THIS SHEET MAY NOT BE TRANSFERED FROM THE CUSTODY OF THE COMPETENT DIVISION OF R&D DEPARTMENT EXCEPT AS AUTHORIZED BY LC FUTURE CENTER NEITHER THIS SHEET NOR THE INFORMATION IT CONTAINS MAY BE USED BY OR DISCLOSED TO ANY THIRD PARTY WITHOUT PRIOR WRITTEN CONSENT OF LC FUTURE CENTER.

Title: DDRIII SO-DIMM A

Size: Custom | Document Number: Y501 NM-A032 | Rev: 1.0

Date: Wednesday, March 27, 2013 | Sheet 11 of 69

DDR3 SO-DIMM B

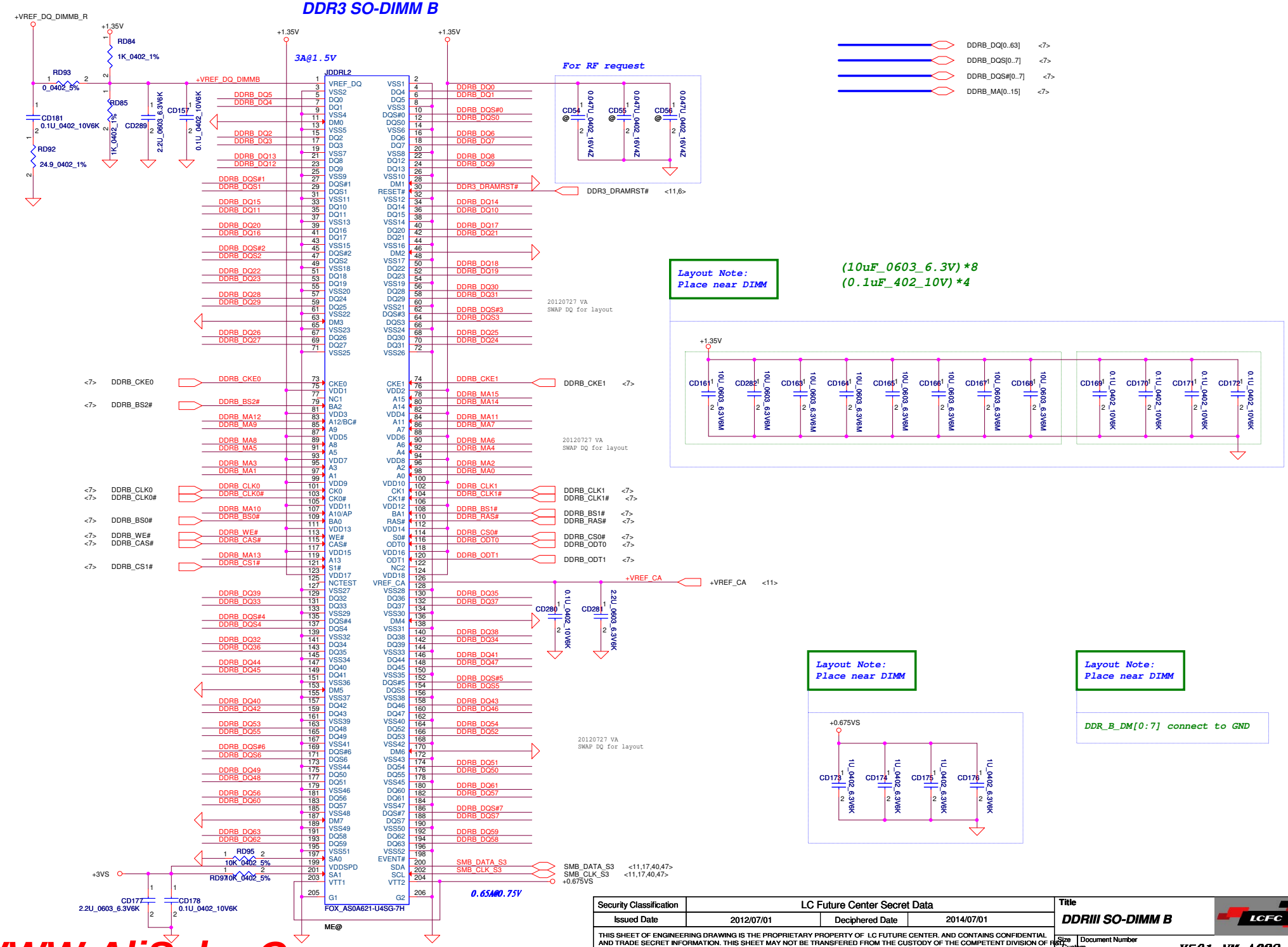

Security Classification	LC Future Center Secret Data		
Issued Date	2012/07/01	Deciphered Date	2014/07/01

THIS SHEET OF ENGINEERING DRAWING IS THE PROPRIETARY PROPERTY OF LC FUTURE CENTER. AND CONTAINS CONFIDENTIAL AND TRADE SECRET INFORMATION. THIS SHEET MAY NOT BE TRANSFERED FROM THE CUSTODY OF THE COMPETENT DIVISION OF R&D DEPARTMENT EXCEPT AS AUTHORIZED BY LC FUTURE CENTER NEITHER THIS SHEET NOR THE INFORMATION IT CONTAINS MAY BE USED BY OR DISCLOSED TO ANY THIRD PARTY WITHOUT PRIOR WRITTEN CONSENT OF LC FUTURE CENTER.

Title: DDRIII SO-DIMM B

Size: Custom | Document Number: Y501 NM-A032 | Rev: 1.0

Date: Wednesday, March 27, 2013 | Sheet 12 of 69

WWW.AliSaler.Com

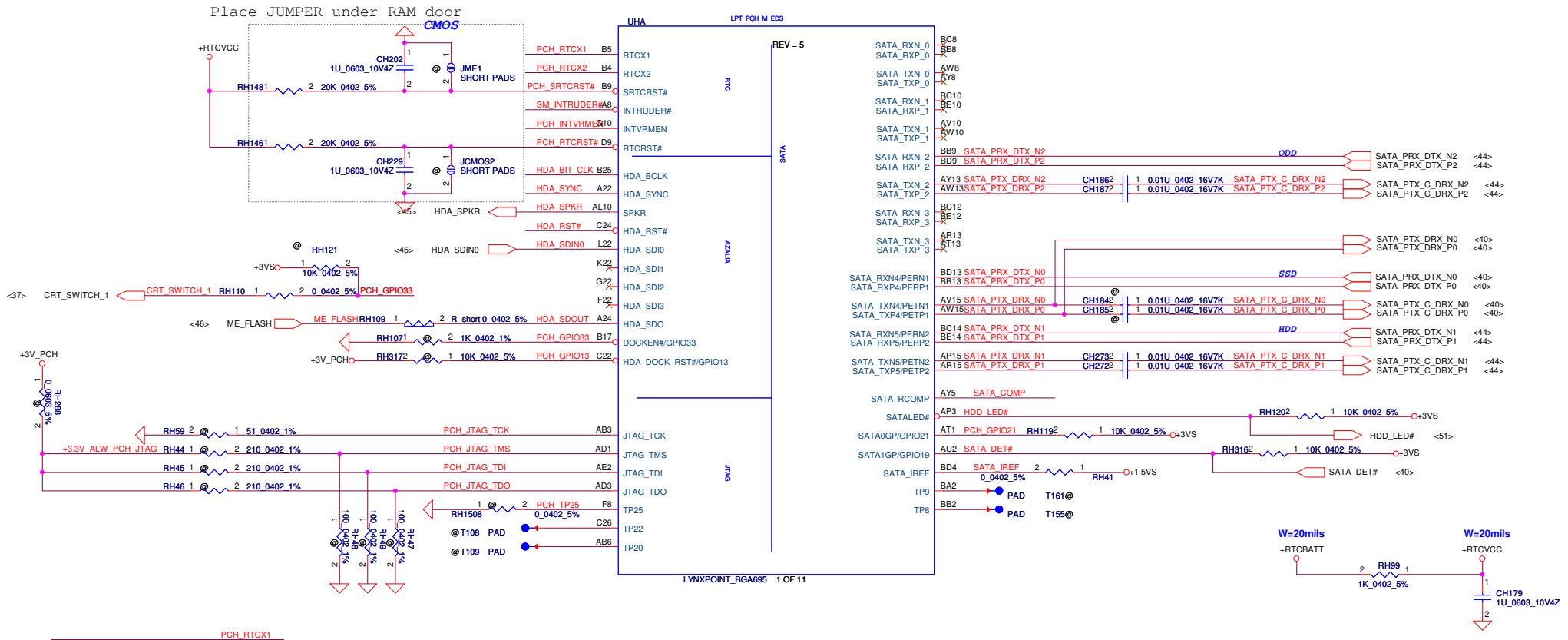

Security Classification	LC Future Center Secret Data		
Issued Date	2012/07/01	Deciphered Date	2014/07/01

THIS SHEET OF ENGINEERING DRAWING IS THE PROPRIETARY PROPERTY OF LC FUTURE CENTER. AND CONTAINS CONFIDENTIAL AND TRADE SECRET INFORMATION. THIS SHEET MAY NOT BE TRANSFERED FROM THE CUSTODY OF THE COMPETENT DIVISION OF R&D, DEPARTMENT EXCEPT AS AUTHORIZED BY LC FUTURE CENTER NEITHER THIS SHEET NOR THE INFORMATION IT CONTAINS MAY BE USED BY OR DISCLOSED TO ANY THIRD PARTY WITHOUT PRIOR WRITTEN CONSENT OF LC FUTURE CENTER.

Title: PCH (1/9) SATA,HDA,SPI, LPC

Size: Custom | Document Number: Y501 NM-A032 | Rev: 1.0

Date: Wednesday, March 27, 2013 | Sheet 13 of 69

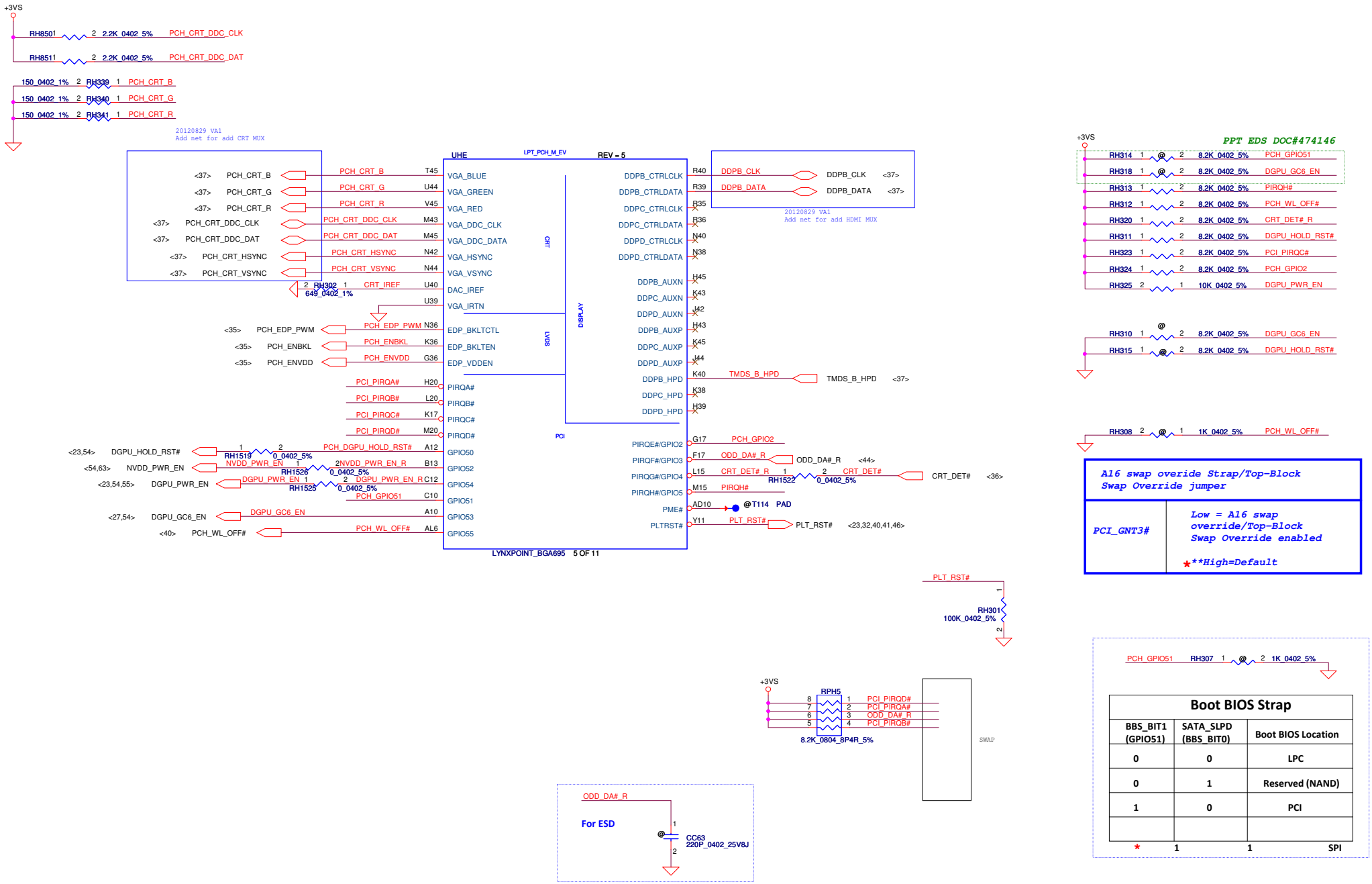

Security Classification	LC Future Center Secret Data		
Issued Date	2012/07/01	Deciphered Date	2014/07/01

THIS SHEET OF ENGINEERING DRAWING IS THE PROPRIETARY PROPERTY OF LC FUTURE CENTER. AND CONTAINS CONFIDENTIAL AND TRADE SECRET INFORMATION. THIS SHEET MAY NOT BE TRANSFERED FROM THE CUSTODY OF THE COMPETENT DIVISION OF R&D DEPARTMENT EXCEPT AS AUTHORIZED BY LC FUTURE CENTER NEITHER THIS SHEET NOR THE INFORMATION IT CONTAINS MAY BE USED BY OR DISCLOSED TO ANY THIRD PARTY WITHOUT PRIOR WRITTEN CONSENT OF LC FUTURE CENTER.

Title: PCH (2/9) PCIE, SMBUS, CLK

Size: Custom | Document Number: Y501 NM-A032 | Rev: 1.0

Date: Wednesday, March 27, 2013 | Sheet 14 of 69

WWW.AliSaler.Com

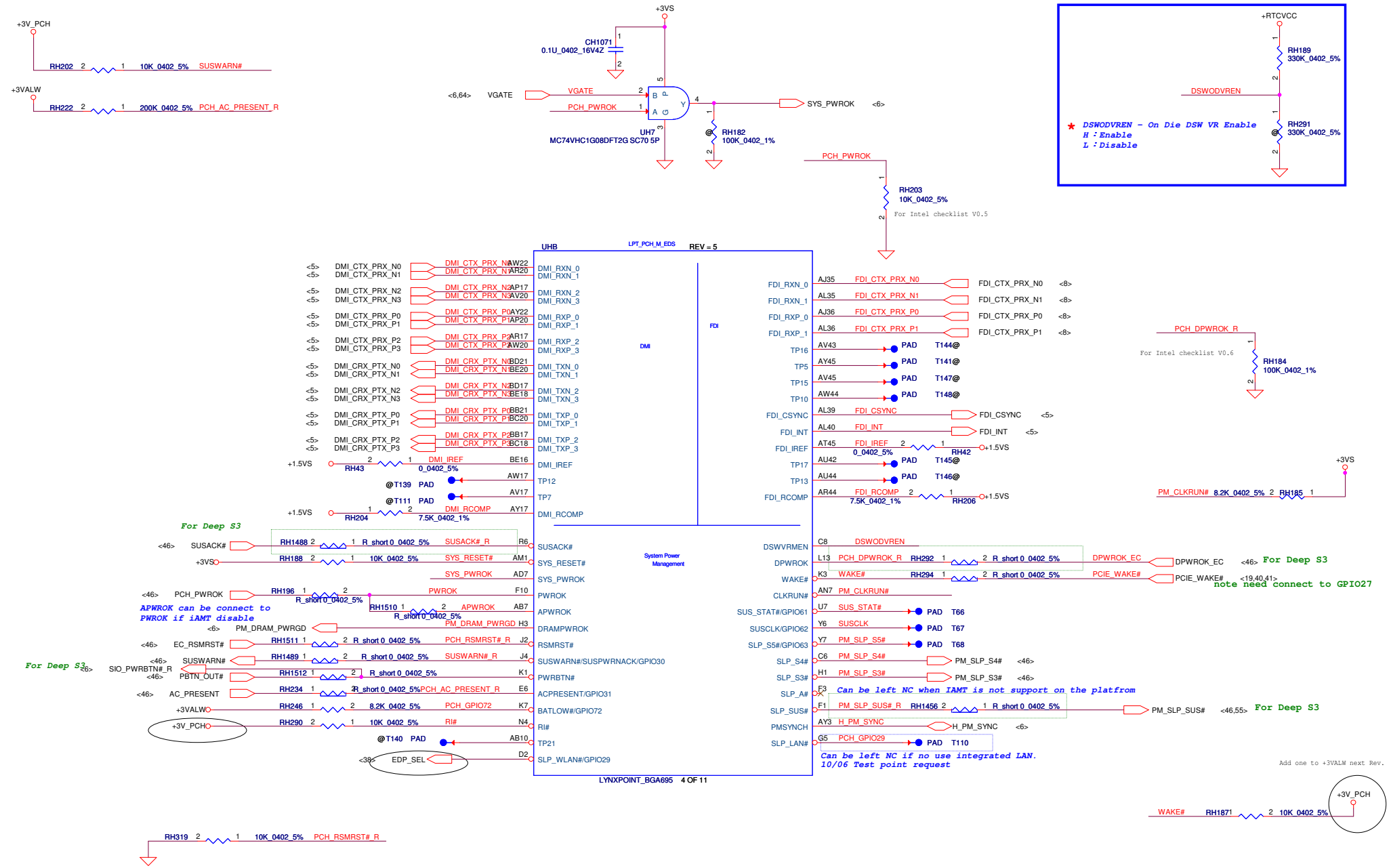

Security Classification	LC Future Center Secret Data		
Issued Date	2012/07/01	Deciphered Date	2014/07/01

THIS SHEET OF ENGINEERING DRAWING IS THE PROPRIETARY PROPERTY OF LC FUTURE CENTER. AND CONTAINS CONFIDENTIAL AND TRADE SECRET INFORMATION. THIS SHEET MAY NOT BE TRANSFERED FROM THE CUSTODY OF THE COMPETENT DIVISION OF R&D DEPARTMENT EXCEPT AS AUTHORIZED BY LC FUTURE CENTER NEITHER THIS SHEET NOR THE INFORMATION IT CONTAINS MAY BE USED BY OR DISCLOSED TO ANY THIRD PARTY WITHOUT PRIOR WRITTEN CONSENT OF LC FUTURE CENTER.

Title: PCH (3/9) PCIE, SMBUS, CLK

Size: Custom | Document Number: Y501 NM-A032 | Rev: 1.0

Date: Wednesday, March 27, 2013 | Sheet 15 of 69

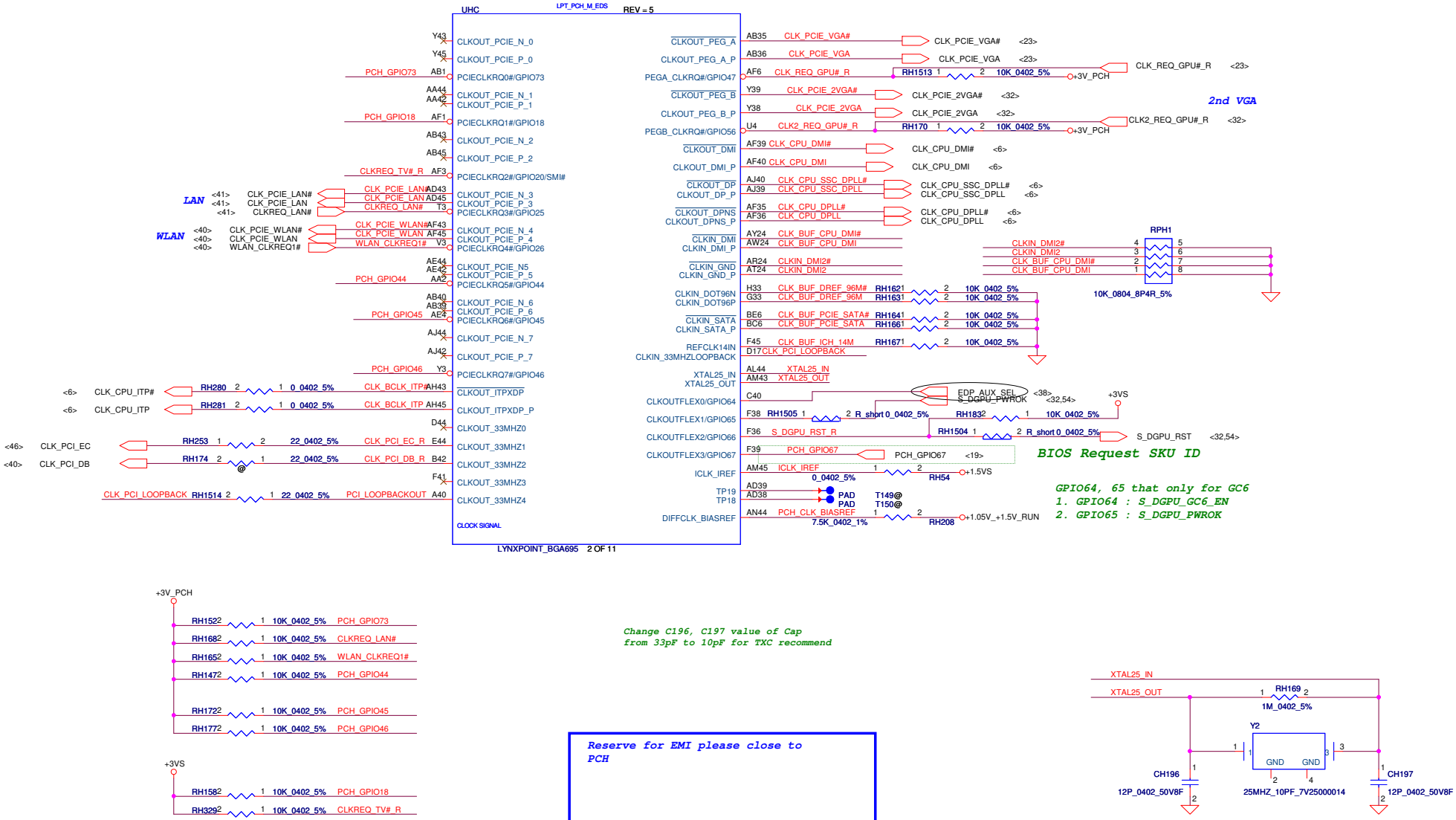

Security Classification	LC Future Center Secret Data		
Issued Date	2012/07/01	Deciphered Date	2014/07/01

THIS SHEET OF ENGINEERING DRAWING IS THE PROPRIETARY PROPERTY OF LC FUTURE CENTER. AND CONTAINS CONFIDENTIAL AND TRADE SECRET INFORMATION. THIS SHEET MAY NOT BE TRANSFERED FROM THE CUSTODY OF THE COMPETENT DIVISION OF R&D DEPARTMENT EXCEPT AS AUTHORIZED BY LC FUTURE CENTER NEITHER THIS SHEET NOR THE INFORMATION IT CONTAINS MAY BE USED BY OR DISCLOSED TO ANY THIRD PARTY WITHOUT PRIOR WRITTEN CONSENT OF LC FUTURE CENTER.

Title: PCH (3/9) DMI, FDI, PM

Size: Custom | Document Number: Y501 NM-A032 | Rev: 1.0

Date: Wednesday, March 27, 2013 | Sheet 16 of 69

WWW.AliSaler.Com

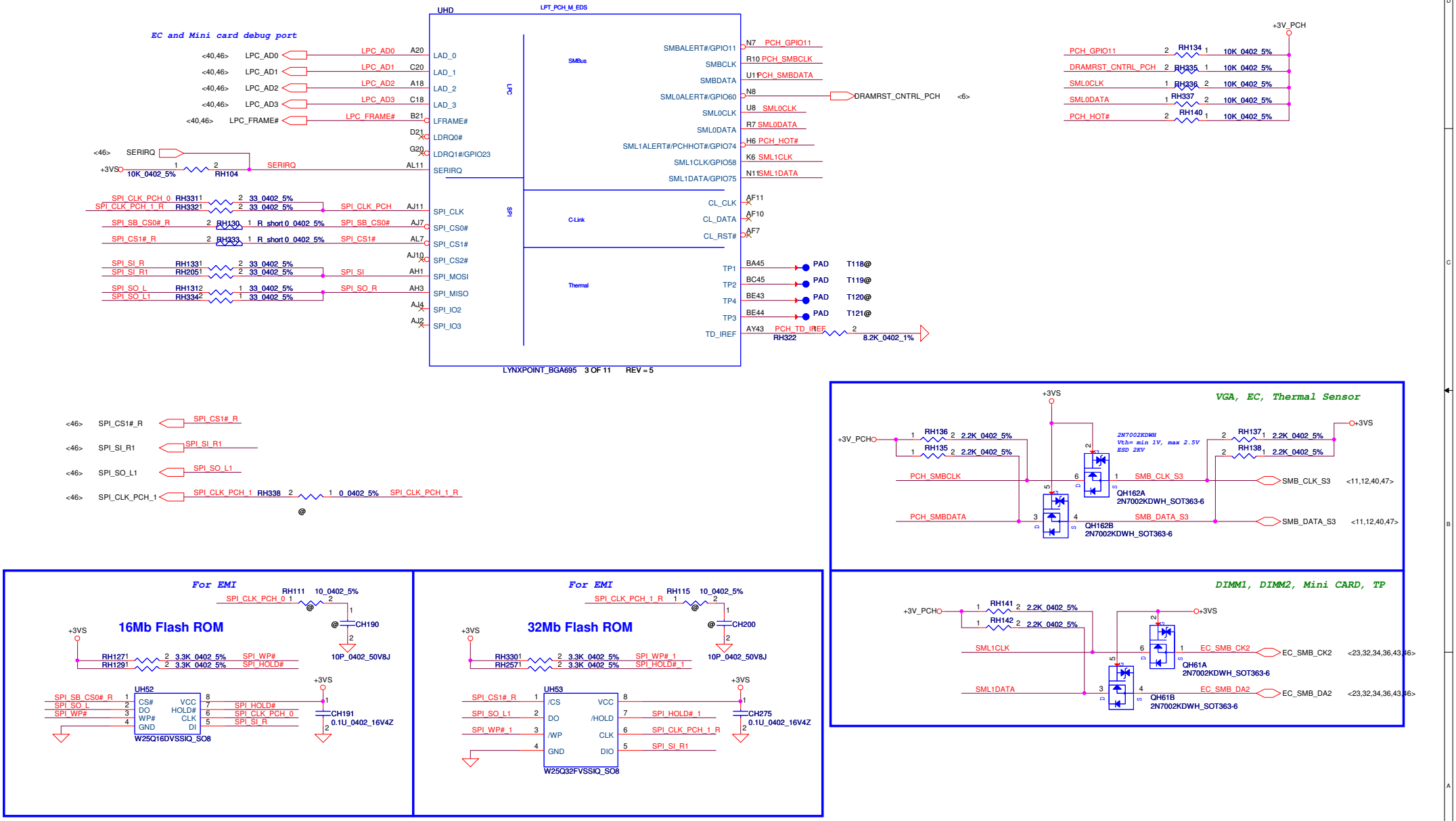

Security Classification	LC Future Center Secret Data		
Issued Date	2012/07/01	Deciphered Date	2014/07/01

THIS SHEET OF ENGINEERING DRAWING IS THE PROPRIETARY PROPERTY OF LC FUTURE CENTER. AND CONTAINS CONFIDENTIAL AND TRADE SECRET INFORMATION. THIS SHEET MAY NOT BE TRANSFERED FROM THE CUSTODY OF THE COMPETENT DIVISION OF R&D DEPARTMENT EXCEPT AS AUTHORIZED BY LC FUTURE CENTER NEITHER THIS SHEET NOR THE INFORMATION IT CONTAINS MAY BE USED BY OR DISCLOSED TO ANY THIRD PARTY WITHOUT PRIOR WRITTEN CONSENT OF LC FUTURE CENTER.

Title: PCH (4/9) LVDS, CRT,DP,HDMI

Size: Custom | Document Number: Y501 NM-A032 | Rev: 1.0

Date: Wednesday, March 27, 2013 | Sheet 17 of 69

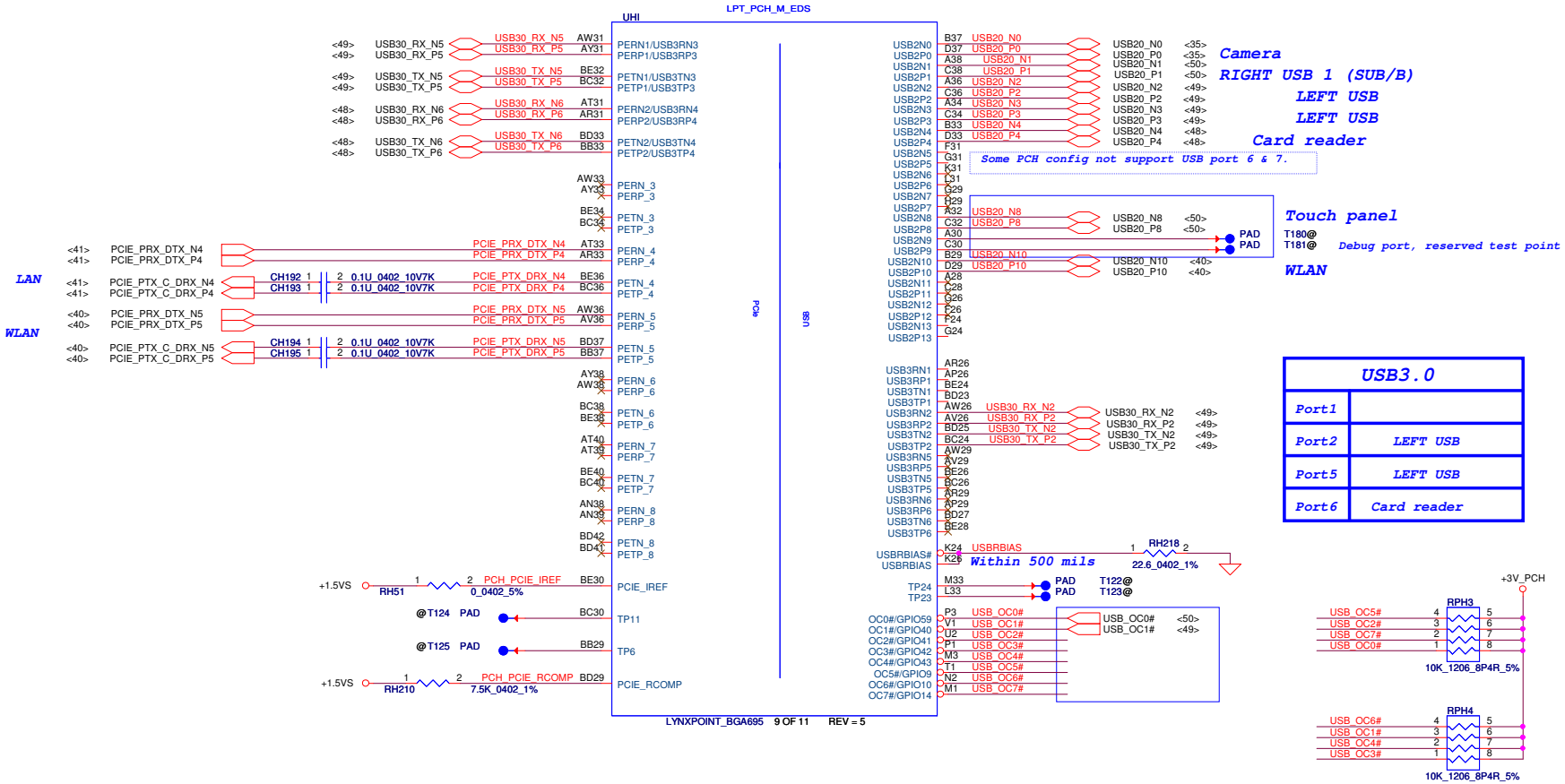

Security Classification	LC Future Center Secret Data		
Issued Date	2012/07/01	Deciphered Date	2014/07/01

THIS SHEET OF ENGINEERING DRAWING IS THE PROPRIETARY PROPERTY OF LC FUTURE CENTER. AND CONTAINS CONFIDENTIAL AND TRADE SECRET INFORMATION. THIS SHEET MAY NOT BE TRANSFERED FROM THE CUSTODY OF THE COMPETENT DIVISION OF R&D DEPARTMENT EXCEPT AS AUTHORIZED BY LC FUTURE CENTER NEITHER THIS SHEET NOR THE INFORMATION IT CONTAINS MAY BE USED BY OR DISCLOSED TO ANY THIRD PARTY WITHOUT PRIOR WRITTEN CONSENT OF LC FUTURE CENTER.

Title: PCH (5/9) PCI, USB

Size: Custom | Document Number: Y501 NM-A032 | Rev: 1.0

Date: Wednesday, March 27, 2013 | Sheet 18 of 69

WWW.AliSaler.Com

Function	PCH_GPIO38	PCH_GPIO67	PCH_GPIO70
			X
			X
			X
Reserve	1	1	X
14"	X	X	0
15"	X	X	1

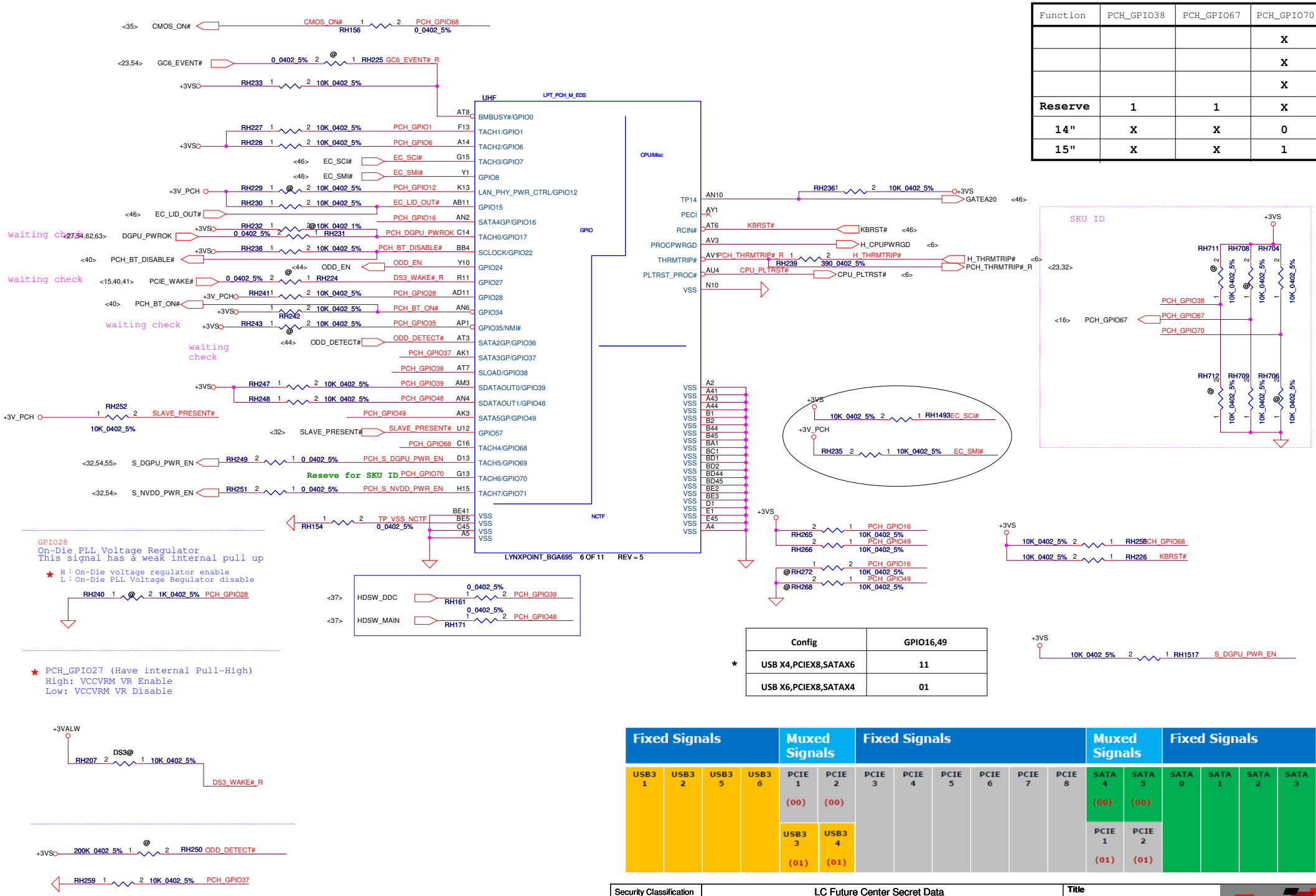

Config	GPIO16,49
* USB X4,PCIEX8,SATAX6	11
USB X6,PCIEX8,SATAX4	01

Fixed Signals				Muxed Signals		Fixed Signals						Muxed Signals		Fixed Signals			
USB3 1	USB3 2	USB3 5	USB3 6	PCIE 1 (00)	PCIE 2 (00)	PCIE 3	PCIE 4	PCIE 5	PCIE 6	PCIE 7	PCIE 8	SATA 4 (00)	SATA 5 (00)	SATA 0	SATA 1	SATA 2	SATA 3
				USB3 3 (01)	USB3 4 (01)							PCIE 1 (01)	PCIE 2 (01)				

Security Classification	LC Future Center Secret Data		
Issued Date	2012/07/01	Deciphered Date	2014/07/01

THIS SHEET OF ENGINEERING DRAWING IS THE PROPRIETARY PROPERTY OF LC FUTURE CENTER. AND CONTAINS CONFIDENTIAL AND TRADE SECRET INFORMATION. THIS SHEET MAY NOT BE TRANSFERED FROM THE CUSTODY OF THE COMPETENT DIVISION OF R&D DEPARTMENT EXCEPT AS AUTHORIZED BY LC FUTURE CENTER NEITHER THIS SHEET NOR THE INFORMATION IT CONTAINS MAY BE USED BY OR DISCLOSED TO ANY THIRD PARTY WITHOUT PRIOR WRITTEN CONSENT OF LC FUTURE CENTER.

Title: PCH (6/9) GPIO, CPU, MISC

Size: Custom | Document Number: Y501 NM-A032 | Rev: 1.0

Date: Wednesday, March 27, 2013 | Sheet 19 of 69

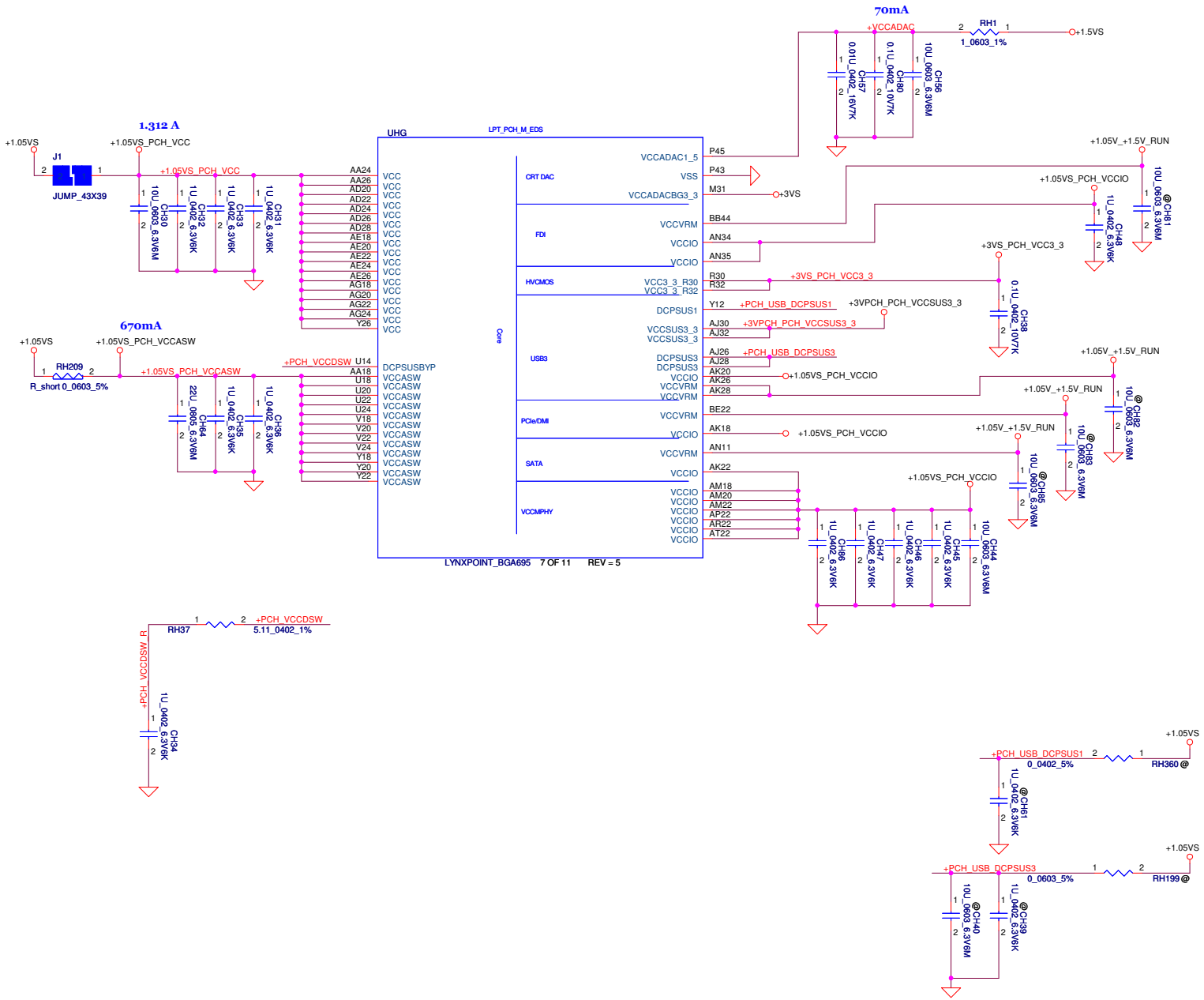

Security Classification	LC Future Center Secret Data		
Issued Date	2012/07/01	Deciphered Date	2014/07/01

THIS SHEET OF ENGINEERING DRAWING IS THE PROPRIETARY PROPERTY OF LC FUTURE CENTER. AND CONTAINS CONFIDENTIAL AND TRADE SECRET INFORMATION. THIS SHEET MAY NOT BE TRANSFERED FROM THE CUSTODY OF THE COMPETENT DIVISION OF R&D DEPARTMENT EXCEPT AS AUTHORIZED BY LC FUTURE CENTER NEITHER THIS SHEET NOR THE INFORMATION IT CONTAINS MAY BE USED BY OR DISCLOSED TO ANY THIRD PARTY WITHOUT PRIOR WRITTEN CONSENT OF LC FUTURE CENTER.

Title: PCH (7/9) PWR

Size: Custom | Document Number: Y501 NM-A032 | Rev: 1.0

Date: Wednesday, March 27, 2013 | Sheet 20 of 69

WWW.AliSaler.Com

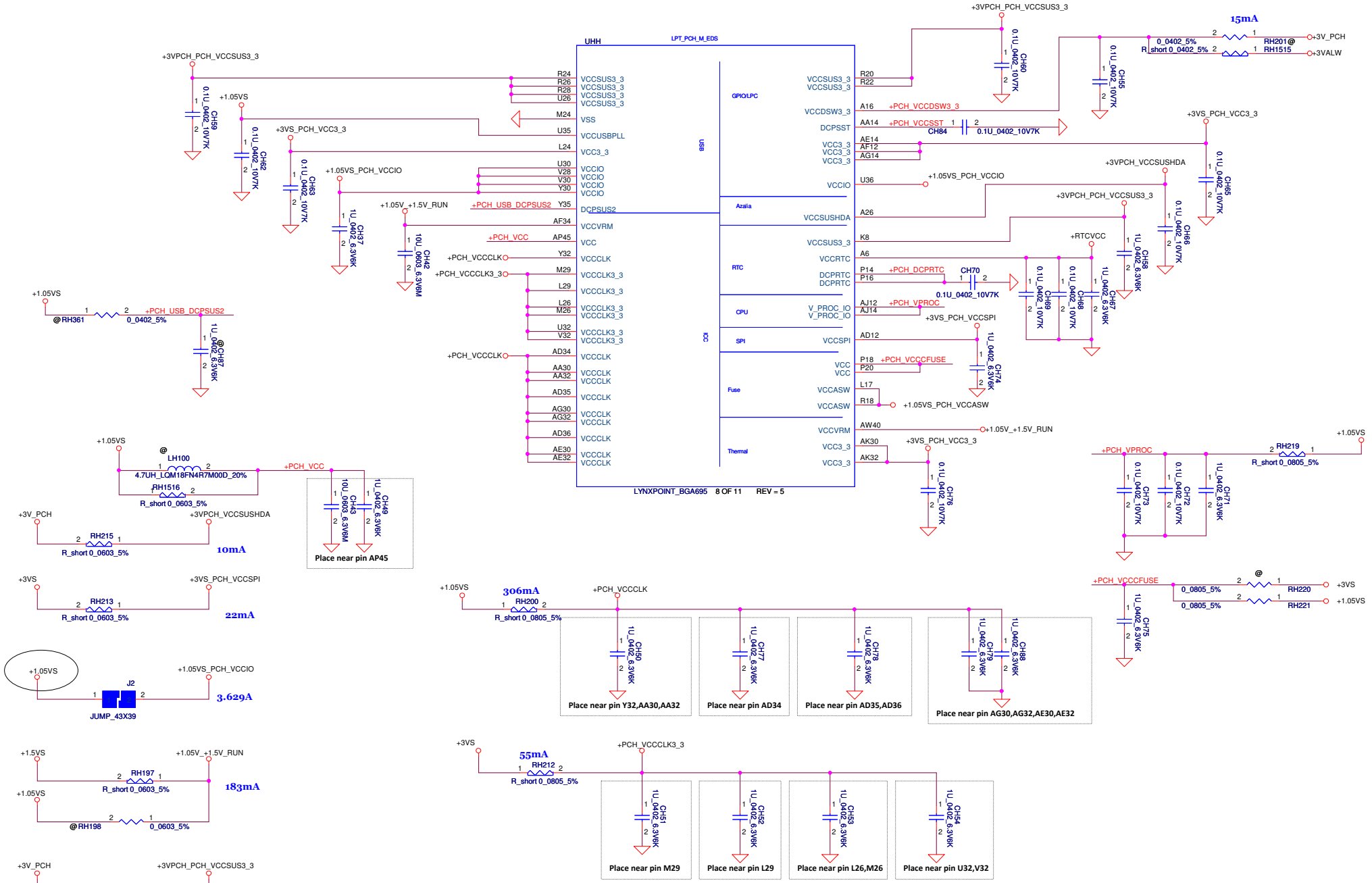

Security Classification	LC Future Center Secret Data		
Issued Date	2012/07/01	Deciphered Date	2014/07/01

THIS SHEET OF ENGINEERING DRAWING IS THE PROPRIETARY PROPERTY OF LC FUTURE CENTER. AND CONTAINS CONFIDENTIAL AND TRADE SECRET INFORMATION. THIS SHEET MAY NOT BE TRANSFERED FROM THE CUSTODY OF THE COMPETENT DIVISION OF R&D DEPARTMENT EXCEPT AS AUTHORIZED BY LC FUTURE CENTER NEITHER THIS SHEET NOR THE INFORMATION IT CONTAINS MAY BE USED BY OR DISCLOSED TO ANY THIRD PARTY WITHOUT PRIOR WRITTEN CONSENT OF LC FUTURE CENTER.

Title: PCH (8/9) PWR

Size: Custom | Document Number: Y501 NM-A032 | Rev: 1.0

Date: Wednesday, March 27, 2013 | Sheet 21 of 69

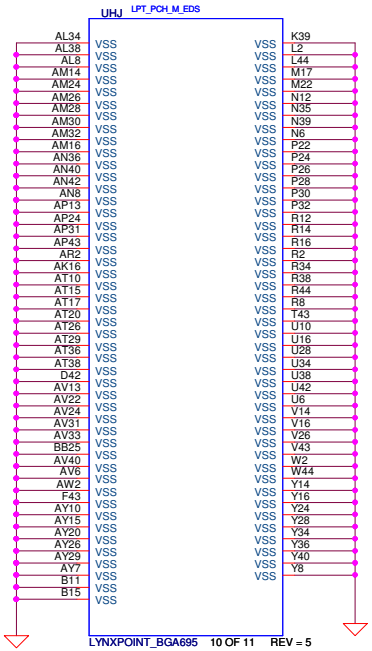

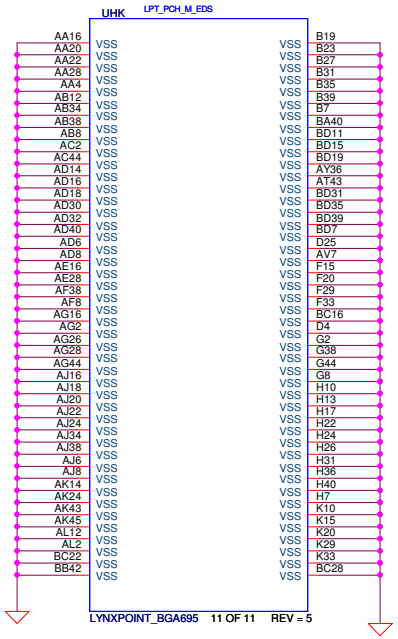

Security Classification	LC Future Center Secret Data		
Issued Date	2012/07/01	Deciphered Date	2014/07/01

THIS SHEET OF ENGINEERING DRAWING IS THE PROPRIETARY PROPERTY OF LC FUTURE CENTER. AND CONTAINS CONFIDENTIAL AND TRADE SECRET INFORMATION. THIS SHEET MAY NOT BE TRANSFERED FROM THE CUSTODY OF THE COMPETENT DIVISION OF R&D DEPARTMENT EXCEPT AS AUTHORIZED BY LC FUTURE CENTER NEITHER THIS SHEET NOR THE INFORMATION IT CONTAINS MAY BE USED BY OR DISCLOSED TO ANY THIRD PARTY WITHOUT PRIOR WRITTEN CONSENT OF LC FUTURE CENTER.

Title: PCH (9/9) VSS

Size: Custom | Document Number: Y501 NM-A032 | Rev: 1.0

Date: Wednesday, March 27, 2013 | Sheet 22 of 69

WWW.AliSaler.Com

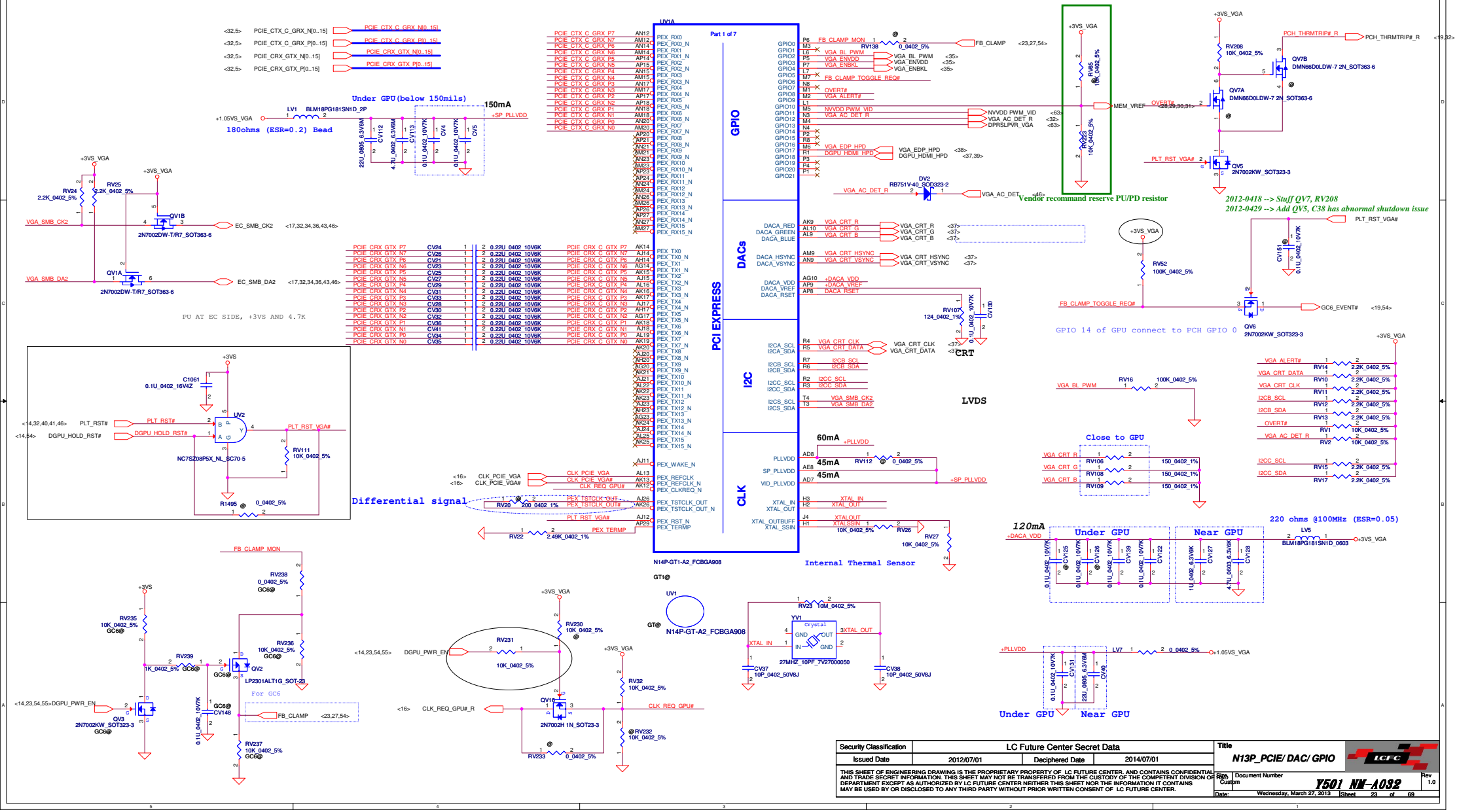
UV1A
Part 1 of 7
PCI EXPRESS
GPIO
DACs
I2C
CLK
N14P-GT1-A2_FCBGA908
GT1@
Under GPU(below 150mils)
150mA
180ohms (ESR=0.2) Bead
LV1 BLM18PG181SN1D_2P
+1.05VS_VGA
+SP_PLLVDD
PCIE_CTX_C_GRX_N[0..15]
PCIE_CTX_C_GRX_P[0..15]
PCIE_CRX_GTX_N[0..15]
PCIE_CRX_GTX_P[0..15]
FB_CLAMP_MON
RV138 0_0402_5%
FB_CLAMP
VGA_BL_PWM
VGA_ENVDD
VGA_ENBKL
FB_CLAMP_TOGGLE_REQ#
OVERT#
VGA_ALERT#
NVVDD_PWM_VID
VGA_AC_DET_R
DPRSLPVR_VGA
VGA_EDP_HPD
DGPU_HDMI_HPD
DV2 RB751V-40_SOD323-2
VGA_AC_DET
Vendor recommand reserve PU/PD resistor
+3VS_VGA
RV135 10K_0402_5%
MEM_VREF
QV7B DMN66D0LDW-7 2N_SOT363-6
QV7A DMN66D0LDW-7 2N_SOT363-6
PCH_THRMTRIP#_R
PLT_RST_VGA#
QV5 2N7002KW_SOT323-3
2012-0418 --> Stuff QV7, RV208
2012-0429 --> Add QV5, C38 has abnormal shutdown issue
RV223 10K_0402_5%
RV208 10K_0402_5%
QV1B 2N7002DW-T/R7_SOT363-6
QV1A 2N7002DW-T/R7_SOT363-6
RV24 2.2K_0402_5%
RV25 2.2K_0402_5%
VGA_SMB_CK2
VGA_SMB_DA2
EC_SMB_CK2
EC_SMB_DA2
PU AT EC SIDE, +3VS AND 4.7K
CRT
LVDS
RV107 124_0402_1%
CV130 0.1U_0402_10V7K
RV52 100K_0402_5%
QV6 2N7002KW_SOT323-3
GC6_EVENT#
GPIO 14 of GPU connect to PCH GPIO 0
CV151 0.1U_0402_10V7K
RV16 100K_0402_5%
VGA_BL_PWM
Close to GPU
RV106 150_0402_1%
RV108 150_0402_1%
RV109 150_0402_1%
RV14 2.2K_0402_5%
RV10 2.2K_0402_5%
RV11 2.2K_0402_5%
RV12 2.2K_0402_5%
RV13 2.2K_0402_5%
RV1 10K_0402_5%
RV2 10K_0402_5%
RV15 2.2K_0402_5%
RV17 2.2K_0402_5%
I2CC_SCL
I2CC_SDA
I2CB_SCL
I2CB_SDA
VGA_CRT_R
VGA_CRT_G
VGA_CRT_B
VGA_CRT_CLK
VGA_CRT_DATA
VGA_CRT_HSYNC
VGA_CRT_VSYNC
+DACA_VDD
DACA_RSET
PLL VDD
SP_PLLVDD
VID_PLLVDD
XTAL_IN
XTAL_OUT
XTAL_OUTBUFF
XTAL_SSIN
60mA
45mA
45mA
RV112 0_0402_5%
RV26 10K_0402_5%
RV27 10K_0402_5%
Internal Thermal Sensor
Differential signal
CLK_PCIE_VGA
CLK_PCIE_VGA#
CLK_REQ_GPU#
PEX_TSTCLK_OUT
PEX_TSTCLK_OUT#
PLT_RST_VGA#
PEX_TERMP
RV20 200_0402_1%
RV22 2.49K_0402_1%
PEX_REFCLK
PEX_REFCLK_N
PEX_CLKREQ_N
PEX_WAKE_N
PEX_RST_N
PEX_TERMP
CV24 0.22U_0402_10V6K
CV25 0.22U_0402_10V6K
CV21 0.22U_0402_10V6K
CV23 0.22U_0402_10V6K
CV26 0.22U_0402_10V6K
CV27 0.22U_0402_10V6K
CV29 0.22U_0402_10V6K
CV31 0.22U_0402_10V6K
CV33 0.22U_0402_10V6K
CV28 0.22U_0402_10V6K
CV30 0.22U_0402_10V6K
CV32 0.22U_0402_10V6K
CV36 0.22U_0402_10V6K
CV41 0.22U_0402_10V6K
CV34 0.22U_0402_10V6K
CV35 0.22U_0402_10V6K
C1061 0.1U_0402_16V4Z
UV2 NC7SZ08P5X_NL_SC70-5
PLT_RST#
DGPU_HOLD_RST#
PLT_RST_VGA#
RV111 10K_0402_5%
R1495 0_0402_5%
120mA
Under GPU
Near GPU
220 ohms @100MHz (ESR=0.05)
LV5 BLM18PG181SN1D_0603
+DACA_VDD
+3VS_VGA
CV125 0.1U_0402_10V7K
CV126 0.1U_0402_10V7K
CV139 0.1U_0402_10V7K
CV122 0.1U_0402_10V7K
CV127 1U_0402_6.3V6K
CV128 4.7U_0603_6.3V6K
LV7 0_0402_5%
+1.05VS_VGA
CV131 0.1U_0402_10V7K
CV40 22U_0805_6.3V6M
FB_CLAMP_MON
RV238 0_0402_5% GC6@
RV235 10K_0402_5% GC6@
RV239 1K_0402_5% GC6@
RV236 10K_0402_5% GC6@
QV2 LP2301ALT1G_SOT-23
For GC6
QV3 2N7002KW_SOT323-3 GC6@
GC6@ CV148 0.1U_0402_10V7K
RV237 10K_0402_5% GC6@
DGPU_PWR_EN
RV231 10K_0402_5%
RV230 10K_0402_5%
RV32 10K_0402_5%
RV232 10K_0402_5%
CLK_REQ_GPU#_R
CLK_REQ_GPU#
QV16 2N7002H 1N_SOT23-3
RV233 0_0402_5%
UV1 N14P-GT-A2_FCBGA908
RV23 10M_0402_5%
YV1 27MHZ_10PF_7V27000050
XTAL_IN
3XTAL_OUT
CV37 10P_0402_50V8J
CV38 10P_0402_50V8J
Security Classification
LC Future Center Secret Data
Issued Date
2012/07/01
Deciphered Date
2014/07/01
THIS SHEET OF ENGINEERING DRAWING IS THE PROPRIETARY PROPERTY OF LC FUTURE CENTER, AND CONTAINS CONFIDENTIAL AND TRADE SECRET INFORMATION. THIS SHEET MAY NOT BE TRANSFERED FROM THE CUSTODY OF THE COMPETENT DIVISION OR DEPARTMENT EXCEPT AS AUTHORIZED BY LC FUTURE CENTER NEITHER THIS SHEET NOR THE INFORMATION IT CONTAINS MAY BE USED BY OR DISCLOSED TO ANY THIRD PARTY WITHOUT PRIOR WRITTEN CONSENT OF LC FUTURE CENTER.
Title
N13P_PCIE/ DAC/ GPIO
LCFC
Size
Custom
Document Number
Y501 NW-A032
Rev
1.0
Date:
Wednesday, March 27, 2013
Sheet
23
of
69

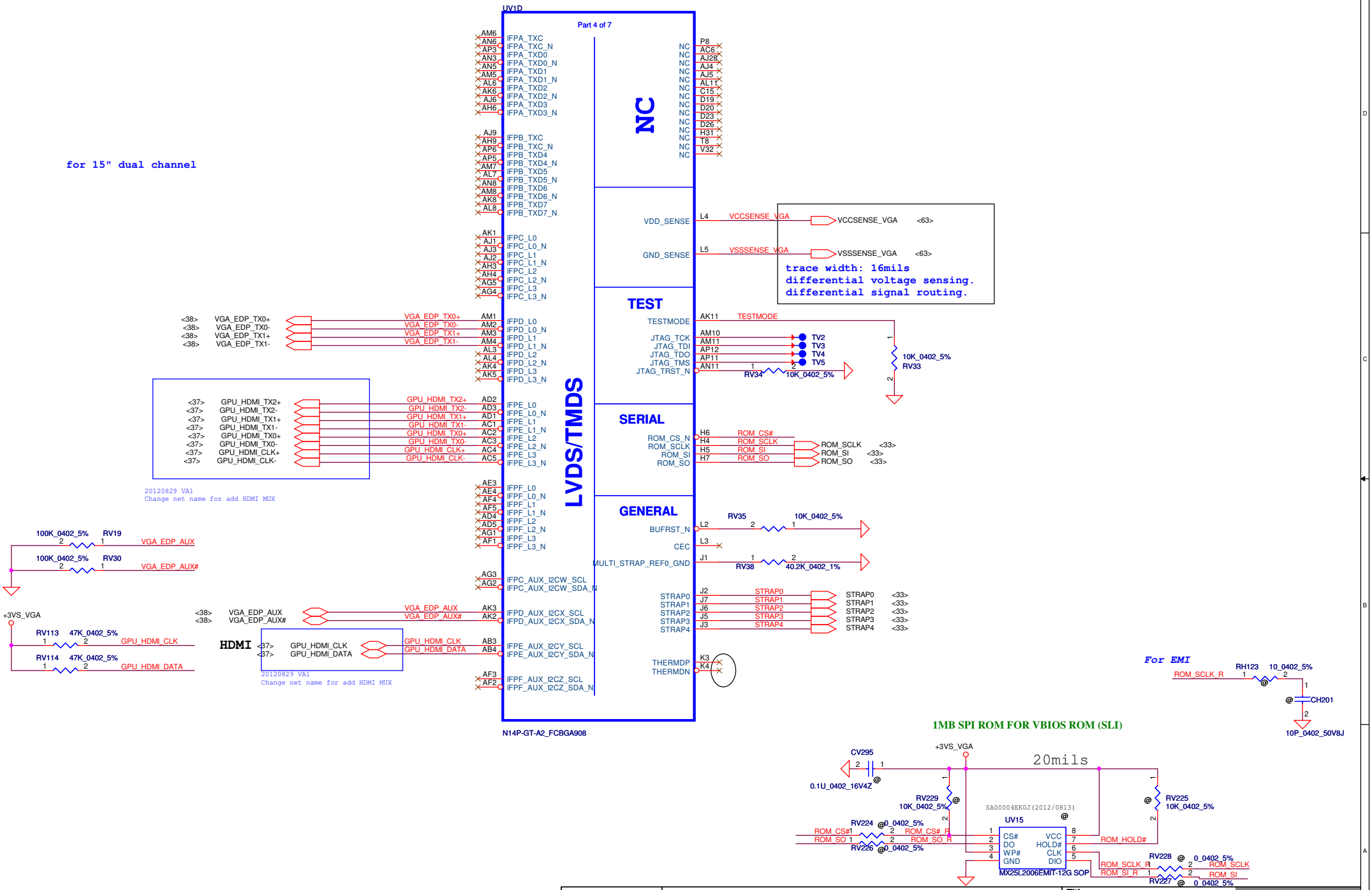

Security Classification	LC Future Center Secret Data		
Issued Date	2012/07/01	Deciphered Date	2014/07/01

THIS SHEET OF ENGINEERING DRAWING IS THE PROPRIETARY PROPERTY OF LC FUTURE CENTER. AND CONTAINS CONFIDENTIAL AND TRADE SECRET INFORMATION. THIS SHEET MAY NOT BE TRANSFERED FROM THE CUSTODY OF THE COMPETENT DIVISION OF R&D DEPARTMENT EXCEPT AS AUTHORIZED BY LC FUTURE CENTER NEITHER THIS SHEET NOR THE INFORMATION IT CONTAINS MAY BE USED BY OR DISCLOSED TO ANY THIRD PARTY WITHOUT PRIOR WRITTEN CONSENT OF LC FUTURE CENTER.

Title: N13P_LVDS/ HDMI/ THERM

Size: Custom | Document Number: Y501 NM-A032 | Rev: 1.0

Date: Wednesday, March 27, 2013 | Sheet 24 of 69

WWW.AliSaler.Com

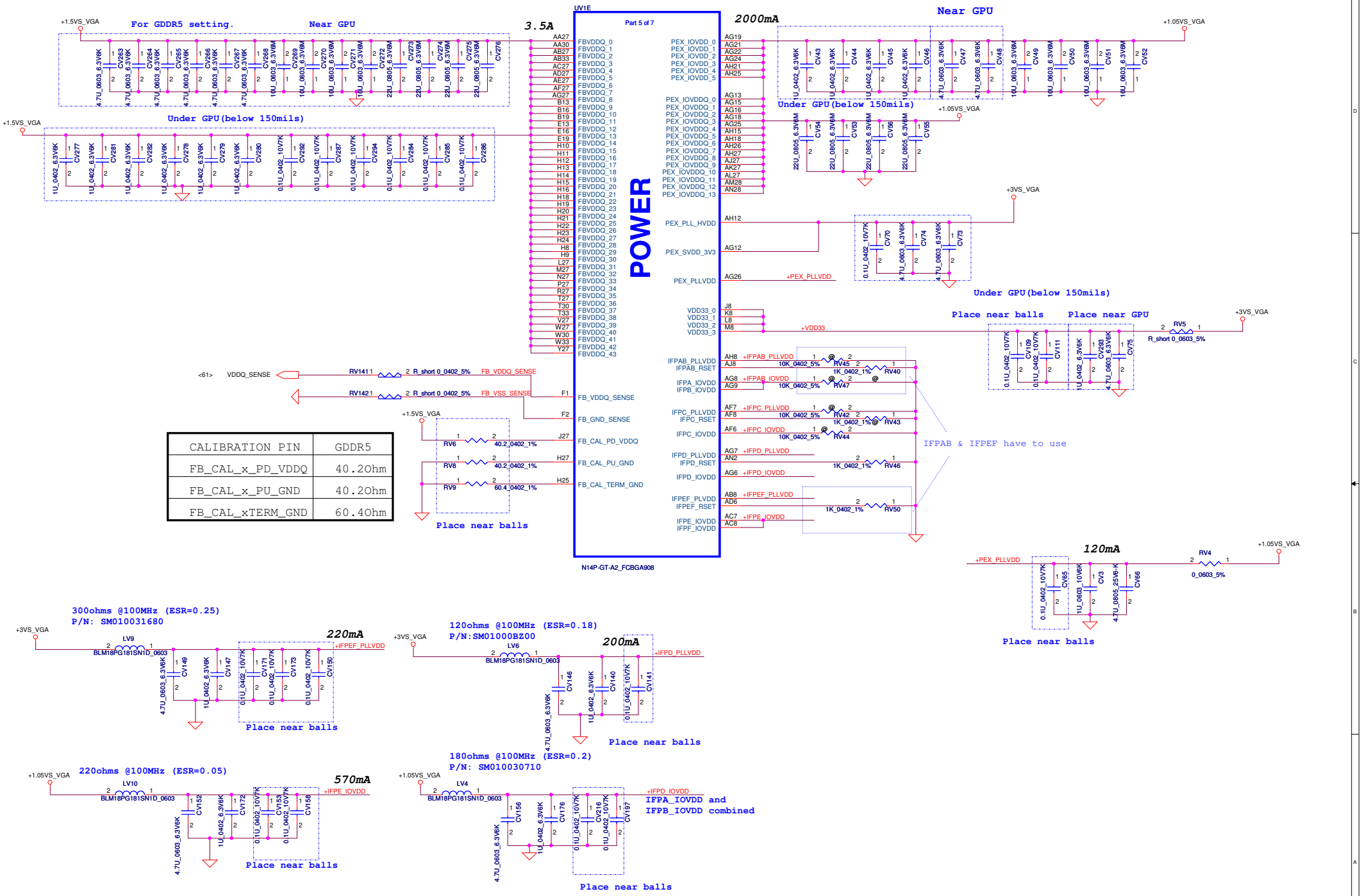

CALIBRATION PIN	GDDR5
FB_CAL_x_PD_VDDQ	40.2Ohm
FB_CAL_x_PU_GND	40.2Ohm
FB_CAL_xTERM_GND	60.4Ohm

Security Classification	LC Future Center Secret Data		
Issued Date	2012/07/01	Deciphered Date	2014/07/01

THIS SHEET OF ENGINEERING DRAWING IS THE PROPRIETARY PROPERTY OF LC FUTURE CENTER. AND CONTAINS CONFIDENTIAL AND TRADE SECRET INFORMATION. THIS SHEET MAY NOT BE TRANSFERED FROM THE CUSTODY OF THE COMPETENT DIVISION OF R&D DEPARTMENT EXCEPT AS AUTHORIZED BY LC FUTURE CENTER NEITHER THIS SHEET NOR THE INFORMATION IT CONTAINS MAY BE USED BY OR DISCLOSED TO ANY THIRD PARTY WITHOUT PRIOR WRITTEN CONSENT OF LC FUTURE CENTER.

Title: N13P_Power

Size: Custom | Document Number: Y501 NM-A032 | Rev: 1.0

Date: Wednesday, March 27, 2013 | Sheet 25 of 69

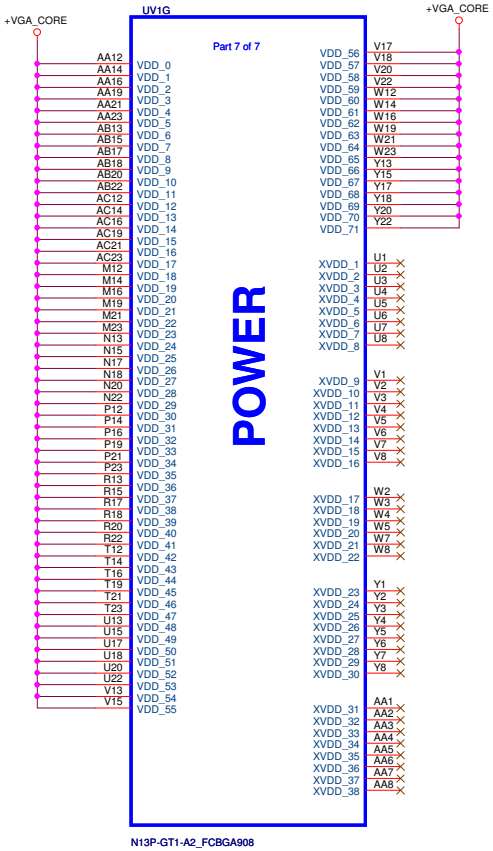

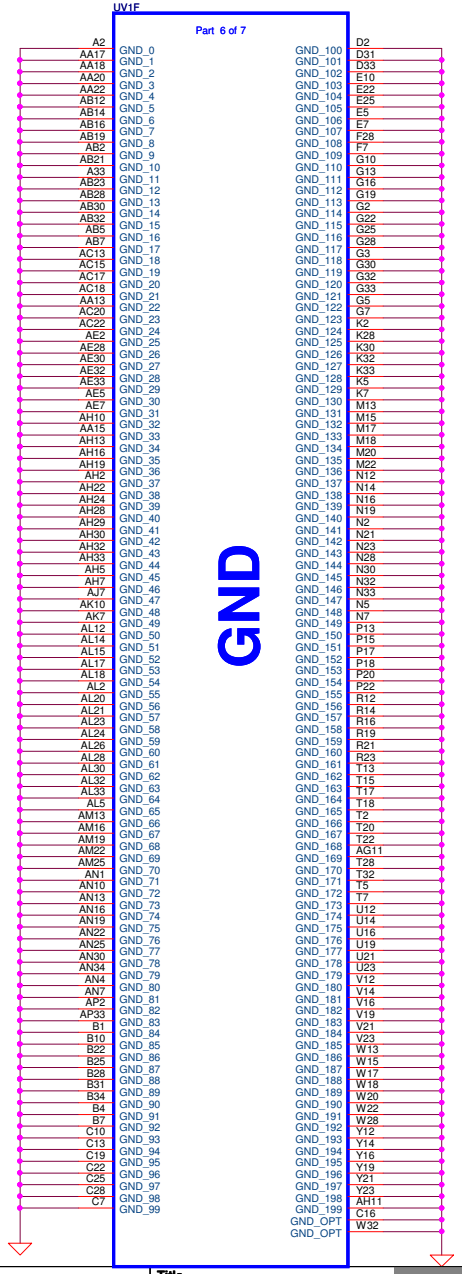

Security Classification	LC Future Center Secret Data		
Issued Date	2012/07/01	Deciphered Date	2014/07/01

THIS SHEET OF ENGINEERING DRAWING IS THE PROPRIETARY PROPERTY OF LC FUTURE CENTER. AND CONTAINS CONFIDENTIAL AND TRADE SECRET INFORMATION. THIS SHEET MAY NOT BE TRANSFERED FROM THE CUSTODY OF THE COMPETENT DIVISION OF R&D DEPARTMENT EXCEPT AS AUTHORIZED BY LC FUTURE CENTER NEITHER THIS SHEET NOR THE INFORMATION IT CONTAINS MAY BE USED BY OR DISCLOSED TO ANY THIRD PARTY WITHOUT PRIOR WRITTEN CONSENT OF LC FUTURE CENTER.

Title: N13P-GT1-A2_FCBGA908
N13P_+VGA CORE, GND

LCFC

Size	Document Number	Rev
Custom	Y501 NM-A032	1.0

Date: Wednesday, March 27, 2013 | Sheet 26 of 69

WWW.AliSaler.Com

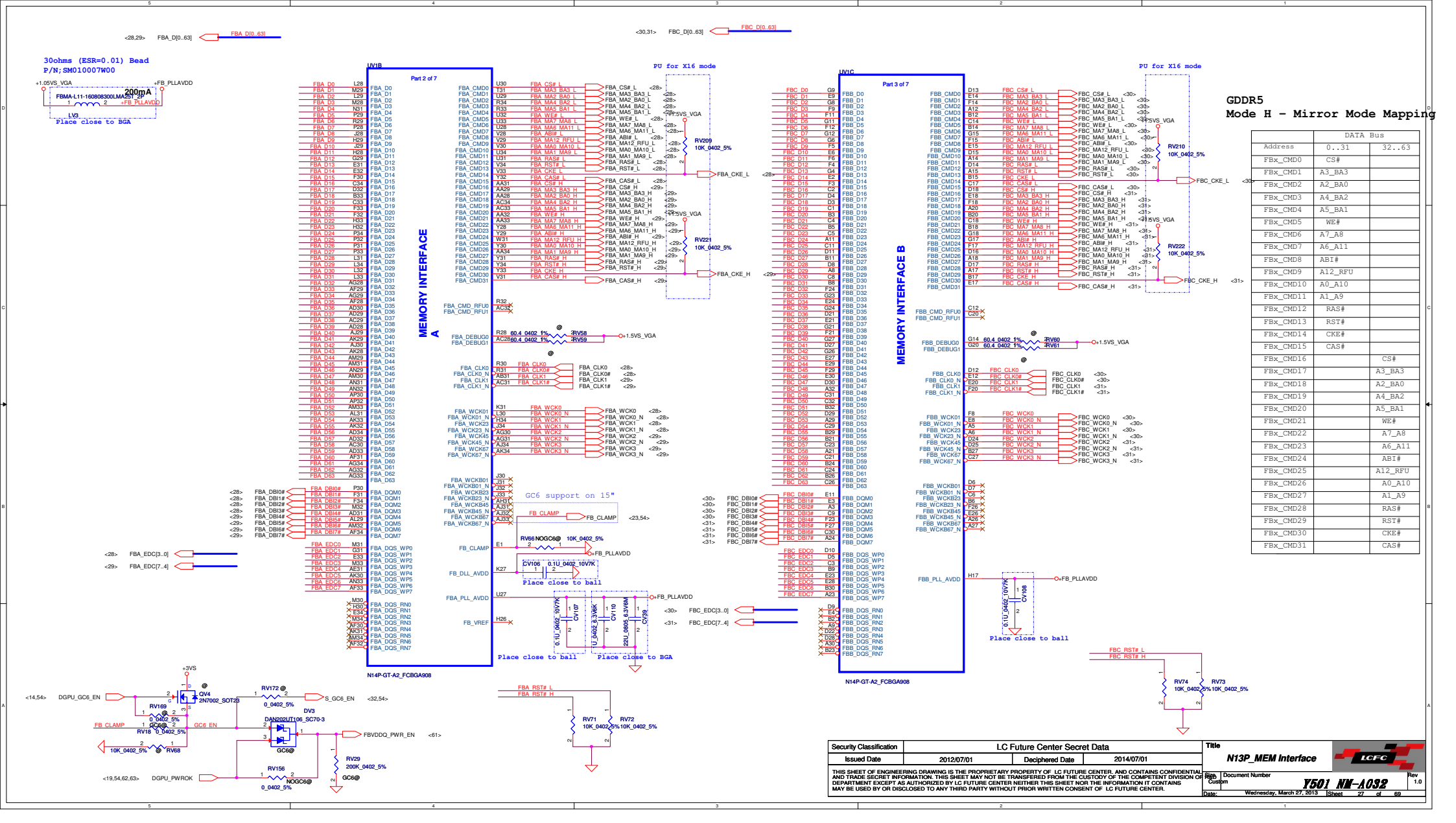

GDDR5
Mode H - Mirror Mode Mapping

	DATA Bus	
Address	0..31	32..63
FBx_CMD0	CS#	
FBx_CMD1	A3_BA3	
FBx_CMD2	A2_BA0	
FBx_CMD3	A4_BA2	
FBx_CMD4	A5_BA1	
FBx_CMD5	WE#	
FBx_CMD6	A7_A8	
FBx_CMD7	A6_A11	
FBx_CMD8	ABI#	
FBx_CMD9	A12_RFU	
FBx_CMD10	A0_A10	
FBx_CMD11	A1_A9	
FBx_CMD12	RAS#	
FBx_CMD13	RST#	
FBx_CMD14	CKE#	
FBx_CMD15	CAS#	
FBx_CMD16		CS#
FBx_CMD17		A3_BA3
FBx_CMD18		A2_BA0
FBx_CMD19		A4_BA2
FBx_CMD20		A5_BA1
FBx_CMD21		WE#
FBx_CMD22		A7_A8
FBx_CMD23		A6_A11
FBx_CMD24		ABI#
FBx_CMD25		A12_RFU
FBx_CMD26		A0_A10
FBx_CMD27		A1_A9
FBx_CMD28		RAS#
FBx_CMD29		RST#
FBx_CMD30		CKE#
FBx_CMD31		CAS#

Security Classification	LC Future Center Secret Data		
Issued Date	2012/07/01	Deciphered Date	2014/07/01

THIS SHEET OF ENGINEERING DRAWING IS THE PROPRIETARY PROPERTY OF LC FUTURE CENTER, AND CONTAINS CONFIDENTIAL AND TRADE SECRET INFORMATION. THIS SHEET MAY NOT BE TRANSFERED FROM THE CUSTODY OF THE COMPETENT DIVISION OR DEPARTMENT EXCEPT AS AUTHORIZED BY LC FUTURE CENTER NEITHER THIS SHEET NOR THE INFORMATION IT CONTAINS MAY BE USED BY OR DISCLOSED TO ANY THIRD PARTY WITHOUT PRIOR WRITTEN CONSENT OF LC FUTURE CENTER.

Title: N13P_MEM Interface

Size: Custom | Document Number: Y501 NM-A032 | Rev: 1.0

Date: Wednesday, March 27, 2013 | Sheet 27 of 69

Memory - Lower 32 bits

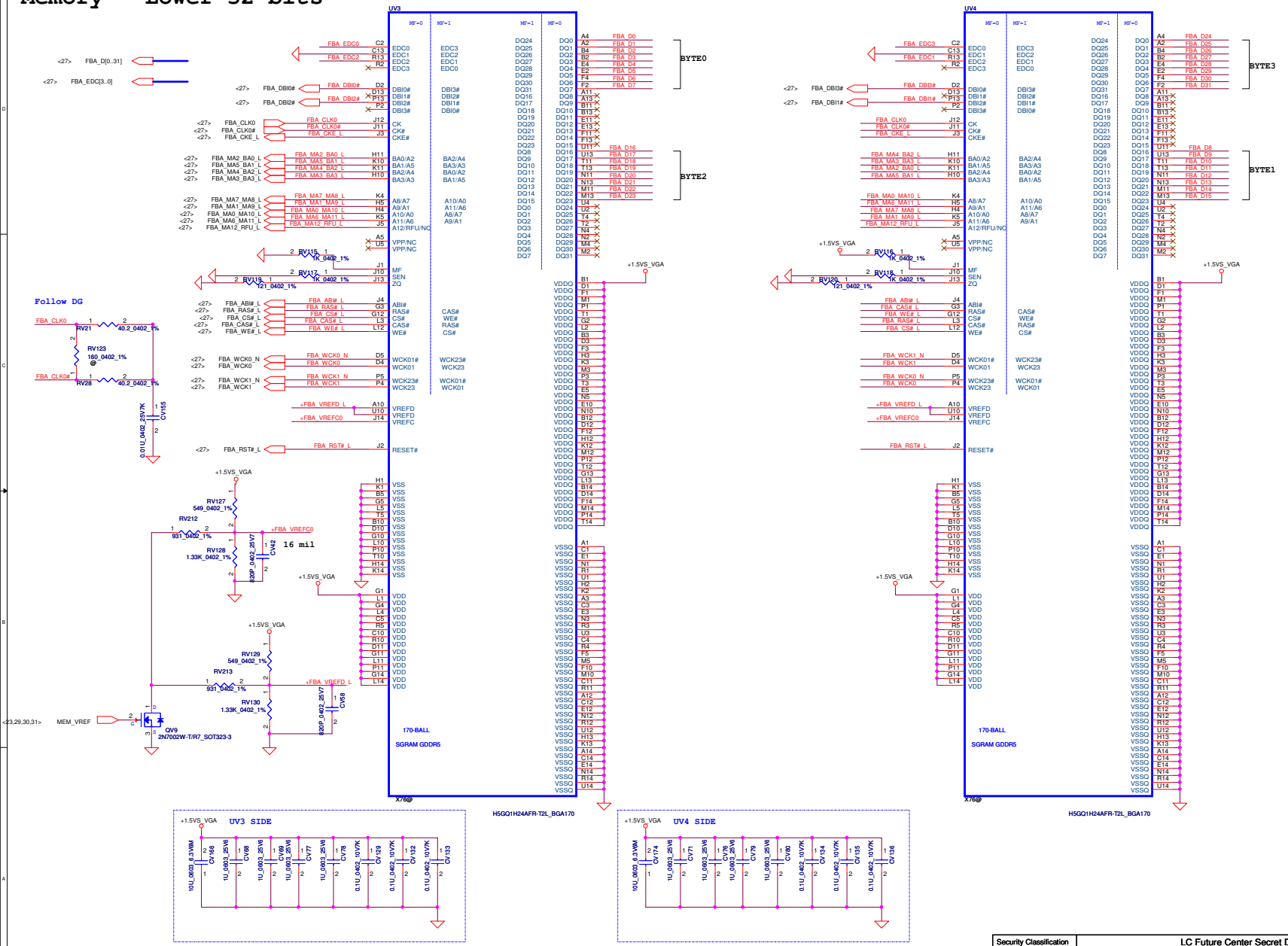

GDDR5
Mode H - Mirror Mode Mapping

	DATA Bus	
Address	0..31	32..63
FBx_CMD0	CS#	
FBx_CMD1	A3_BA3	
FBx_CMD2	A2_BA0	
FBx_CMD3	A4_BA2	
FBx_CMD4	A5_BA1	
FBx_CMD5	WE#	
FBx_CMD6	A7_A8	
FBx_CMD7	A6_A11	
FBx_CMD8	ABI#	
FBx_CMD9	A12_RFU	
FBx_CMD10	A0_A10	
FBx_CMD11	A1_A9	
FBx_CMD12	RAS#	
FBx_CMD13	RST#	
FBx_CMD14	CKE#	
FBx_CMD15	CAS#	
FBx_CMD16		CS#
FBx_CMD17		A3_BA3
FBx_CMD18		A2_BA0
FBx_CMD19		A4_BA2
FBx_CMD20		A5_BA1
FBx_CMD21		WE#
FBx_CMD22		A7_A8
FBx_CMD23		A6_A11
FBx_CMD24		ABI#
FBx_CMD25		A12_RFU
FBx_CMD26		A0_A10
FBx_CMD27		A1_A9
FBx_CMD28		RAS#
FBx_CMD29		RST#
FBx_CMD30		CKE#
FBx_CMD31		CAS#

Security Classification	LC Future Center Secret Data		
Issued Date	2012/07/01	Deciphered Date	2014/07/01

THIS SHEET OF ENGINEERING DRAWING IS THE PROPRIETARY PROPERTY OF LC FUTURE CENTER, AND CONTAINS CONFIDENTIAL AND TRADE SECRET INFORMATION. THIS SHEET MAY NOT BE TRANSFERED FROM THE CUSTODY OF THE COMPETENT DIVISION OF R&D DEPARTMENT EXCEPT AS AUTHORIZED BY LC FUTURE CENTER NEITHER THIS SHEET NOR THE INFORMATION IT CONTAINS MAY BE USED BY OR DISCLOSED TO ANY THIRD PARTY WITHOUT PRIOR WRITTEN CONSENT OF LC FUTURE CENTER.

Title: N13P_GDDR5_A Lower

Size: Custom | Document Number: Y501 NM-A032 | Rev: 1.0

Date: Wednesday, March 27, 2013 | Sheet 28 of 69

WWW.AliSaler.Com

Memory - Upper 32 bits

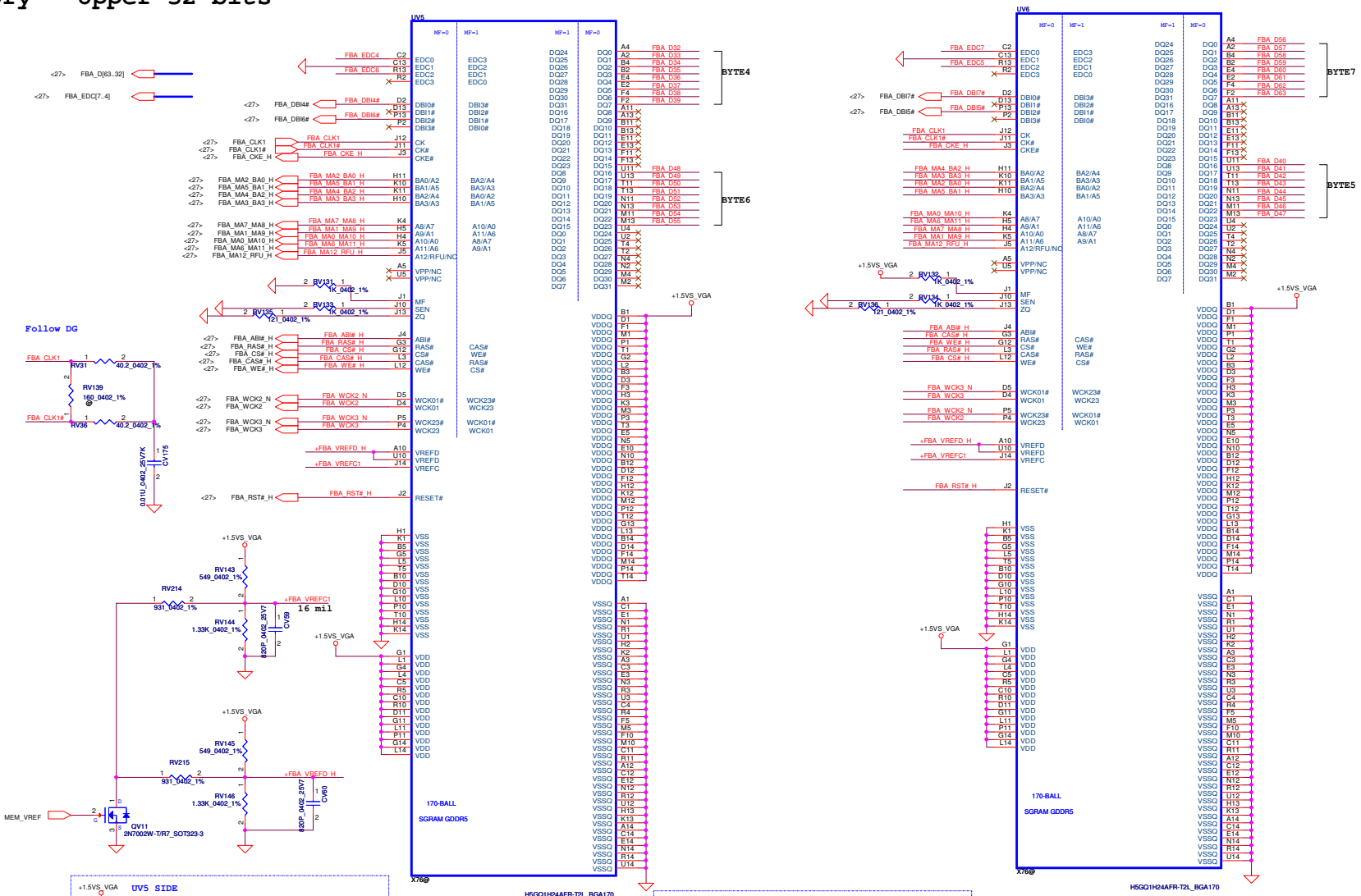

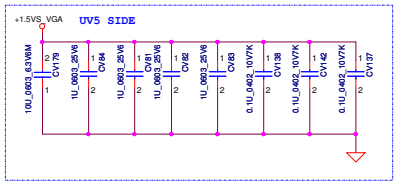

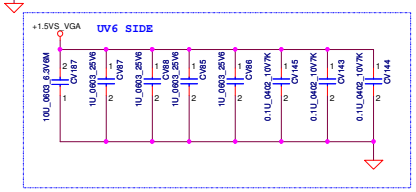

GDDR5
Mode H - Mirror Mode Mapping

	DATA Bus	
Address	0..31	32..63
FBx_CMD0	CS#	
FBx_CMD1	A3_BA3	
FBx_CMD2	A2_BA0	
FBx_CMD3	A4_BA2	
FBx_CMD4	A5_BA1	
FBx_CMD5	WE#	
FBx_CMD6	A7_A8	
FBx_CMD7	A6_A11	
FBx_CMD8	ABI#	
FBx_CMD9	A12_RFU	
FBx_CMD10	A0_A10	
FBx_CMD11	A1_A9	
FBx_CMD12	RAS#	
FBx_CMD13	RST#	
FBx_CMD14	CKE#	
FBx_CMD15	CAS#	
FBx_CMD16		CS#
FBx_CMD17		A3_BA3
FBx_CMD18		A2_BA0
FBx_CMD19		A4_BA2
FBx_CMD20		A5_BA1
FBx_CMD21		WE#
FBx_CMD22		A7_A8
FBx_CMD23		A6_A11
FBx_CMD24		ABI#
FBx_CMD25		A12_RFU
FBx_CMD26		A0_A10
FBx_CMD27		A1_A9
FBx_CMD28		RAS#
FBx_CMD29		RST#
FBx_CMD30		CKE#
FBx_CMD31		CAS#

Security Classification	LC Future Center Secret Data		
Issued Date	2012/07/01	Deciphered Date	2014/07/01

THIS SHEET OF ENGINEERING DRAWING IS THE PROPRIETARY PROPERTY OF LC FUTURE CENTER, AND CONTAINS CONFIDENTIAL AND TRADE SECRET INFORMATION. THIS SHEET MAY NOT BE TRANSFERED FROM THE CUSTODY OF THE COMPETENT DIVISION OF R&D DEPARTMENT EXCEPT AS AUTHORIZED BY LC FUTURE CENTER NEITHER THIS SHEET NOR THE INFORMATION IT CONTAINS MAY BE USED BY OR DISCLOSED TO ANY THIRD PARTY WITHOUT PRIOR WRITTEN CONSENT OF LC FUTURE CENTER.

Title: N13P_GDDR5_A Upper

Size: Custom | Document Number: Y501 NN-A032 | Rev: 1.0

Date: Wednesday, March 27, 2013 | Sheet 29 of 69

Memory Partition C - Lower 32 bits

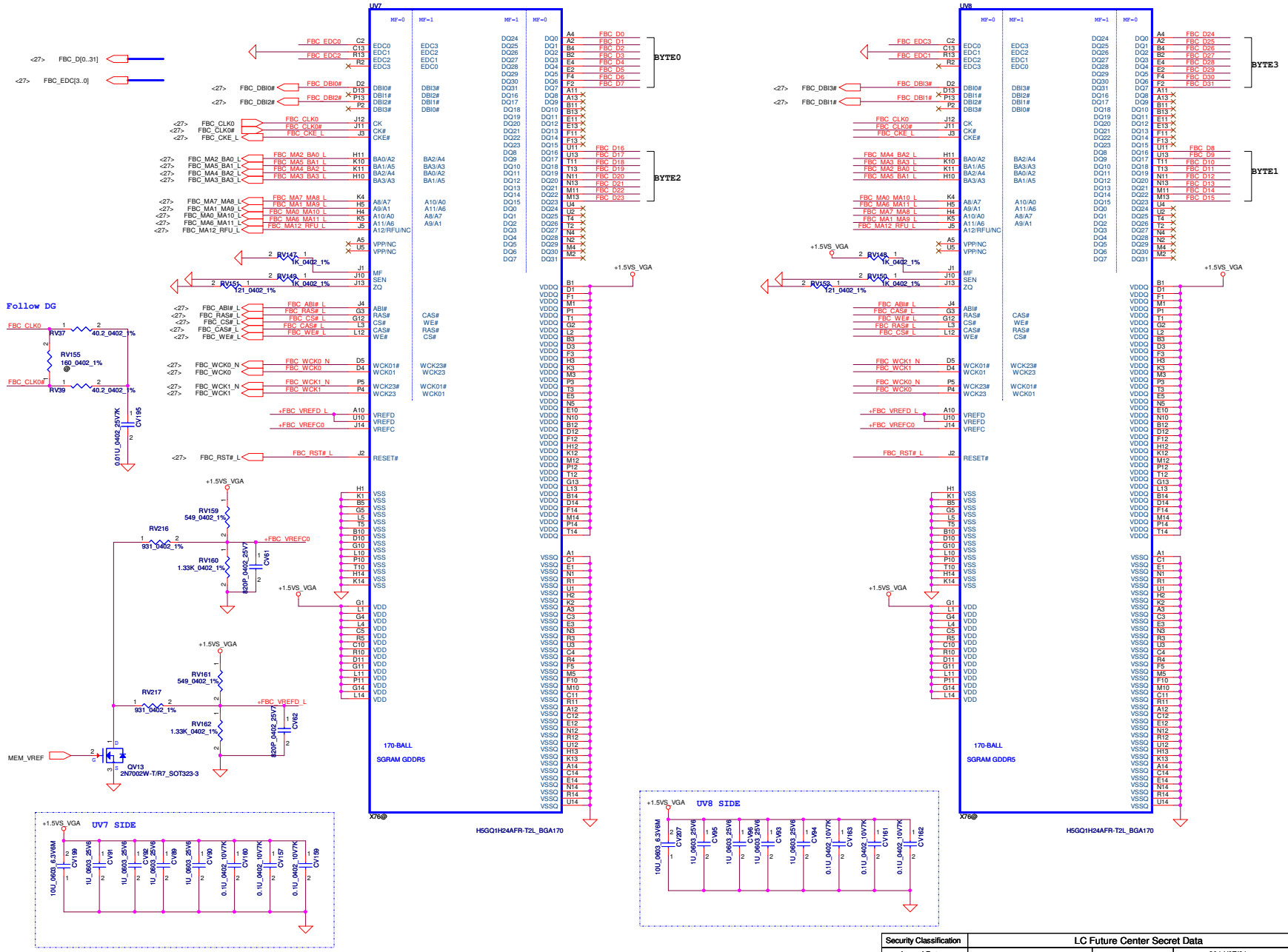

GDDR5
Mode H - Mirror Mode Mapping

	DATA Bus	
Address	0..31	32..63
FBx_CMD0	CS#	
FBx_CMD1	A3_BA3	
FBx_CMD2	A2_BA0	
FBx_CMD3	A4_BA2	
FBx_CMD4	A5_BA1	
FBx_CMD5	WE#	
FBx_CMD6	A7_A8	
FBx_CMD7	A6_A11	
FBx_CMD8	ABI#	
FBx_CMD9	A12_RFU	
FBx_CMD10	A0_A10	
FBx_CMD11	A1_A9	
FBx_CMD12	RAS#	
FBx_CMD13	RST#	
FBx_CMD14	CKE#	
FBx_CMD15	CAS#	
FBx_CMD16		CS#
FBx_CMD17		A3_BA3
FBx_CMD18		A2_BA0
FBx_CMD19		A4_BA2
FBx_CMD20		A5_BA1
FBx_CMD21		WE#
FBx_CMD22		A7_A8
FBx_CMD23		A6_A11
FBx_CMD24		ABI#
FBx_CMD25		A12_RFU
FBx_CMD26		A0_A10
FBx_CMD27		A1_A9
FBx_CMD28		RAS#
FBx_CMD29		RST#
FBx_CMD30		CKE#
FBx_CMD31		CAS#

Security Classification	LC Future Center Secret Data		
Issued Date	2012/07/01	Deciphered Date	2014/07/01

THIS SHEET OF ENGINEERING DRAWING IS THE PROPRIETARY PROPERTY OF LC FUTURE CENTER. AND CONTAINS CONFIDENTIAL AND TRADE SECRET INFORMATION. THIS SHEET MAY NOT BE TRANSFERED FROM THE CUSTODY OF THE COMPETENT DIVISION OR DEPARTMENT EXCEPT AS AUTHORIZED BY LC FUTURE CENTER NEITHER THIS SHEET NOR THE INFORMATION IT CONTAINS MAY BE USED BY OR DISCLOSED TO ANY THIRD PARTY WITHOUT PRIOR WRITTEN CONSENT OF LC FUTURE CENTER.

Title: N13P_GDDR5_C Lower

Size: Custom | Document Number: Y501 NM-A032 | Rev: 1.0

Date: Wednesday, March 27, 2013 | Sheet 30 of 69

WWW.AliSaler.Com

Memory Partition C - Upper 32 bits

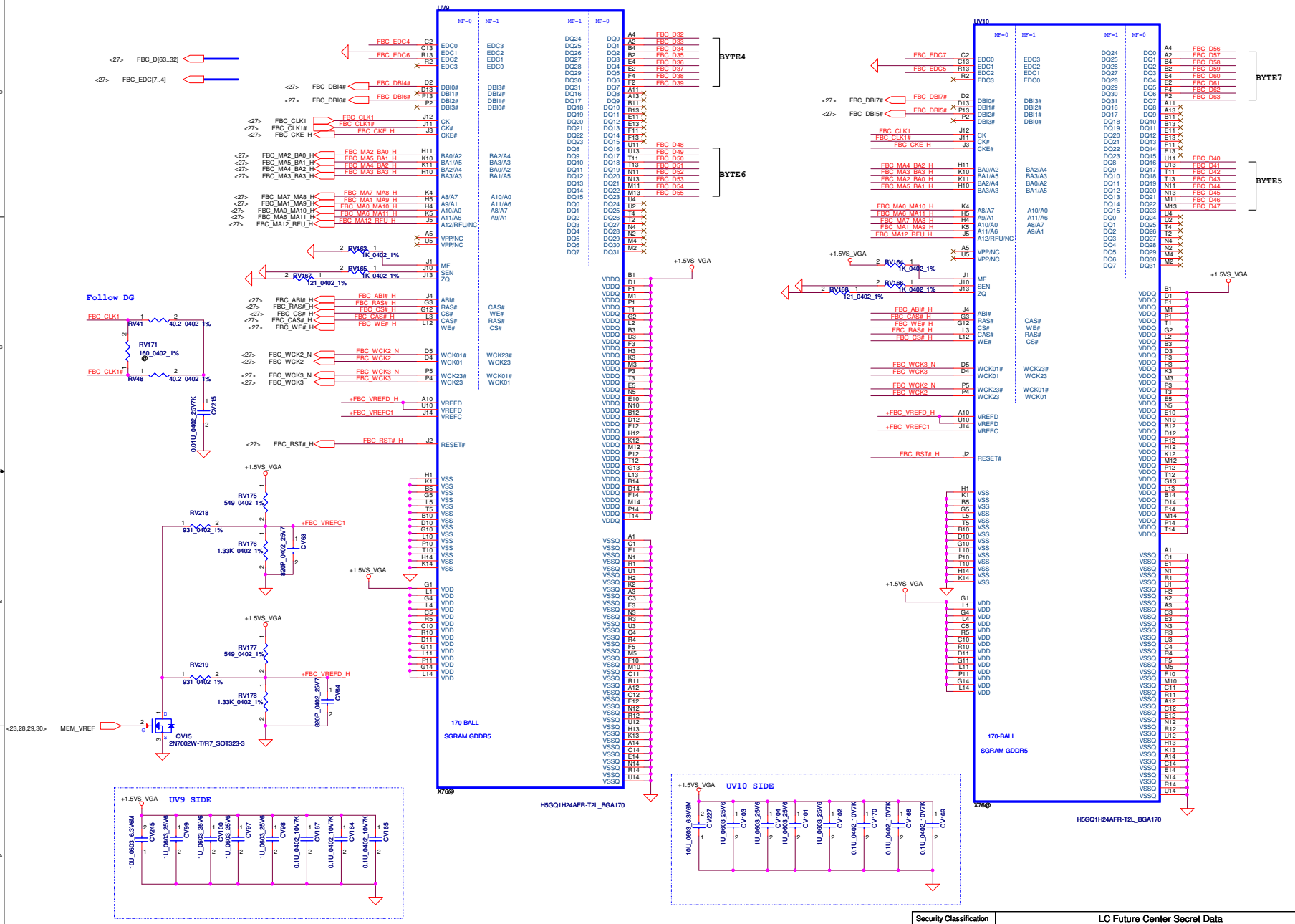

GDDR5
Mode H - Mirror Mode Mapping

	DATA Bus	
Address	0..31	32..63
FBx_CMD0	CS#	
FBx_CMD1	A3_BA3	
FBx_CMD2	A2_BA0	
FBx_CMD3	A4_BA2	
FBx_CMD4	A5_BA1	
FBx_CMD5	WE#	
FBx_CMD6	A7_A8	
FBx_CMD7	A6_A11	
FBx_CMD8	ABI#	
FBx_CMD9	A12_RFU	
FBx_CMD10	A0_A10	
FBx_CMD11	A1_A9	
FBx_CMD12	RAS#	
FBx_CMD13	RST#	
FBx_CMD14	CKE#	
FBx_CMD15	CAS#	
FBx_CMD16		CS#
FBx_CMD17		A3_BA3
FBx_CMD18		A2_BA0
FBx_CMD19		A4_BA2
FBx_CMD20		A5_BA1
FBx_CMD21		WE#
FBx_CMD22		A7_A8
FBx_CMD23		A6_A11
FBx_CMD24		ABI#
FBx_CMD25		A12_RFU
FBx_CMD26		A0_A10
FBx_CMD27		A1_A9
FBx_CMD28		RAS#
FBx_CMD29		RST#
FBx_CMD30		CKE#
FBx_CMD31		CAS#

Security Classification	LC Future Center Secret Data		
Issued Date	2012/07/01	Deciphered Date	2014/07/01

THIS SHEET OF ENGINEERING DRAWING IS THE PROPRIETARY PROPERTY OF LC FUTURE CENTER. AND CONTAINS CONFIDENTIAL AND TRADE SECRET INFORMATION. THIS SHEET MAY NOT BE TRANSFERED FROM THE CUSTODY OF THE COMPETENT DIVISION OR DEPARTMENT EXCEPT AS AUTHORIZED BY LC FUTURE CENTER NEITHER THIS SHEET NOR THE INFORMATION IT CONTAINS MAY BE USED BY OR DISCLOSED TO ANY THIRD PARTY WITHOUT PRIOR WRITTEN CONSENT OF LC FUTURE CENTER.

Title: N13P_GDDR5_C Upper

Size: Custom | Document Number: Y501 NM-A032 | Rev: 1.0

Date: Wednesday, March 27, 2013 | Sheet 31 of 69

follow MXM 3.0 spec

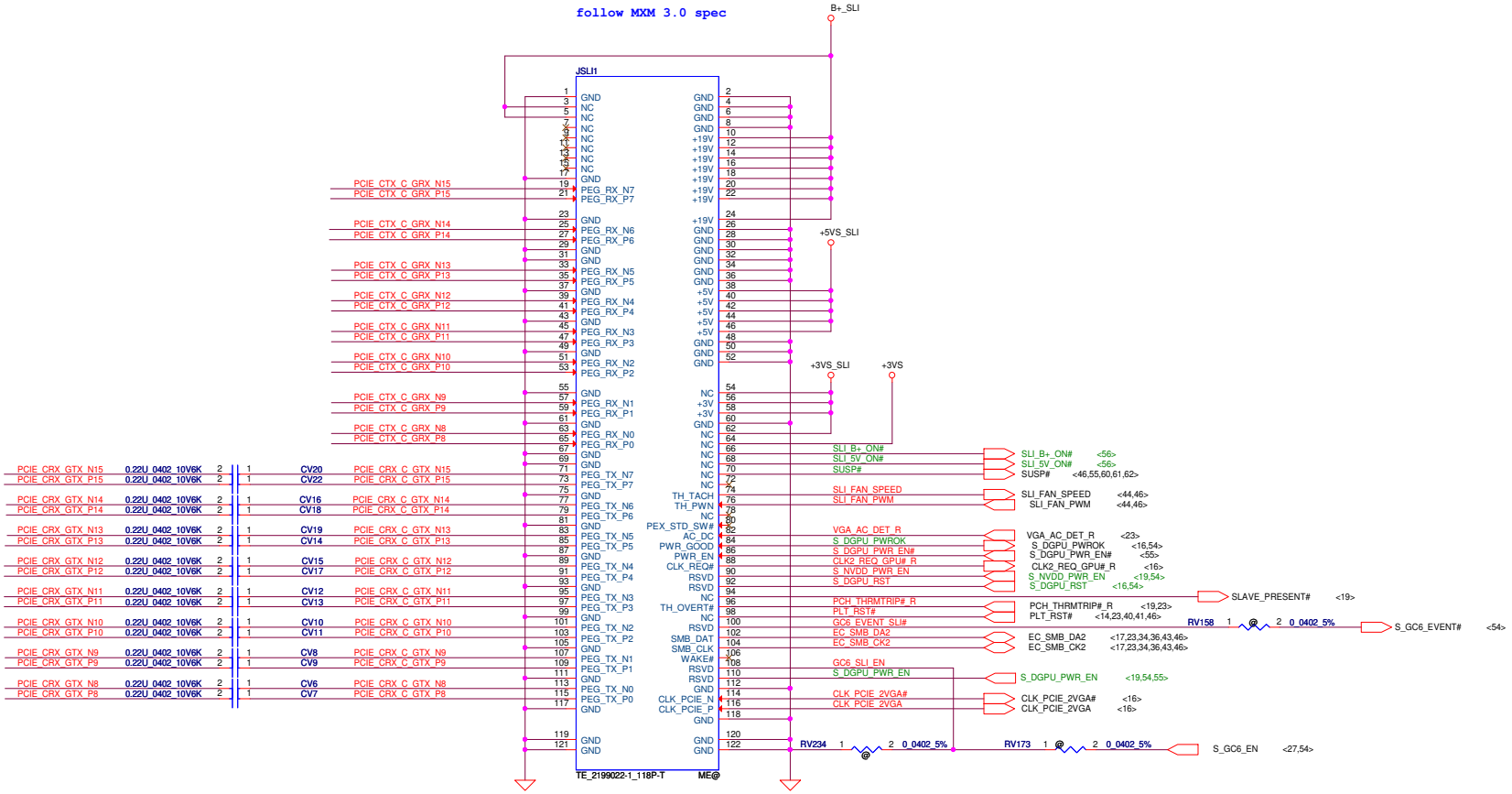

11/11 for 2nd VGA fan need to notic EC

<23,5>	PCIE_CTX_C_GRX_N[0..15]	PCIE_CTX_C_GRX_N[0..15]
<23,5>	PCIE_CTX_C_GRX_P[0..15]	PCIE_CTX_C_GRX_P[0..15]
<23,5>	PCIE_CRX_GTX_N[0..15]	PCIE_CRX_GTX_N[0..15]
<23,5>	PCIE_CRX_GTX_P[0..15]	PCIE_CRX_GTX_P[0..15]

Security Classification	LC Future Center Secret Data		
Issued Date	2012/07/01	Deciphered Date	2014/07/01

THIS SHEET OF ENGINEERING DRAWING IS THE PROPRIETARY PROPERTY OF LC FUTURE CENTER. AND CONTAINS CONFIDENTIAL AND TRADE SECRET INFORMATION. THIS SHEET MAY NOT BE TRANSFERED FROM THE CUSTODY OF THE COMPETENT DIVISION OF R&D DEPARTMENT EXCEPT AS AUTHORIZED BY LC FUTURE CENTER NEITHER THIS SHEET NOR THE INFORMATION IT CONTAINS MAY BE USED BY OR DISCLOSED TO ANY THIRD PARTY WITHOUT PRIOR WRITTEN CONSENT OF LC FUTURE CENTER.

Title: VGA MXM

Size: Custom | Document Number: Y501 NM-A032 | Rev: 1.0

Date: Wednesday, March 27, 2013 | Sheet 32 of 69

WWW.AliSaler.Com

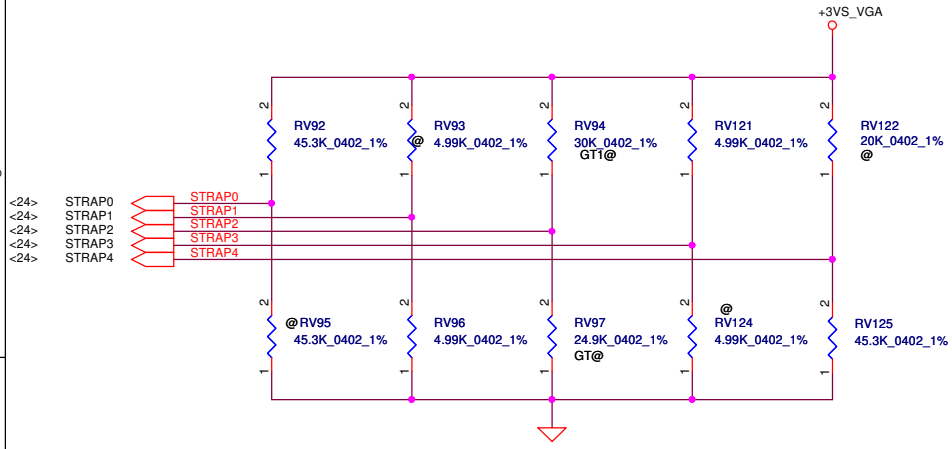

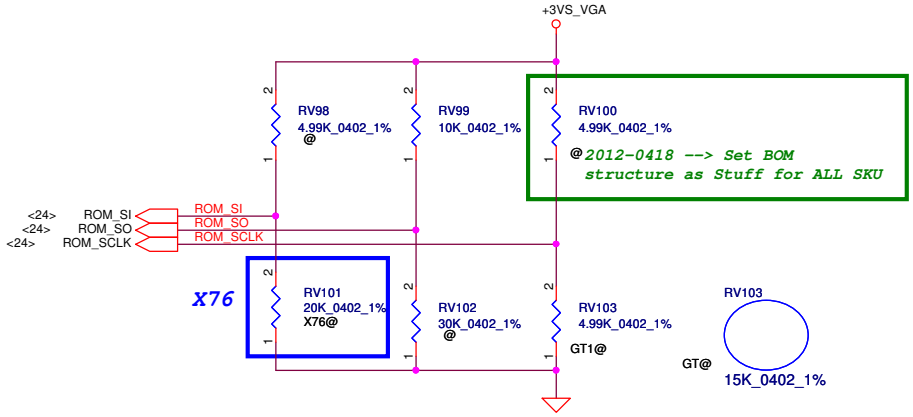

Physical Strapping pin	Power Rail	Logical Strapping Bit3	Logical Strapping Bit2	Logical Strapping Bit1	Logical Strapping Bit0
ROM_SCLK	+3VS_VGA	PCI_DEVID[4]	SUB_VENDOR	SLOT_CLK_CFG	PEX_PLL_EN_TERM
ROM_SI	+3VS_VGA	RAM_CFG[3]	RAM_CFG[2]	RAM_CFG[1]	RAM_CFG[0]
ROM_SO	+3VS_VGA	FB[1]	FB[0]	SMB_ALT_ADDR	VGA_DEVICE
STRAP0	+3VS_VGA	USER[3]	USER[2]	USER[1]	USER[0]
STRAP1	+3VS_VGA	3GIO_PAD_CFG_ADR[3]	3GIO_PAD_CFG_ADR[2]	3GIO_PAD_CFG_ADR[1]	3GIO_PAD_CFG_ADR[0]
STRAP2	+3VS_VGA	PCI_DEVID[3]	PCI_DEVID[2]	PCI_DEVID[1]	PCI_DEVID[0]
STRAP3	+3VS_VGA	SOR3_EXPOSED	SOR2_EXPOSED	SOR1_EXPOSED	SOR0_EXPOSED
STRAP4	+3VS_VGA	RESERVED	PCIE_SPEED_ CHANGE_GEN3	PCIE_MAX_SPEED	DP_PLL_VDD33V

Resistor Values	Pull-up to +3VS_VGA	Pull-down to Gnd
5K	1000	0000
10K	1001	0001
15K	1010	0010
20K	1011	0011
25K	1100	0100
30K	1101	0101
35K	1110	0110
45K	1111	0111

SLOT_CLK_CFG	
0	GPU and MCH don't share a common reference clock
1	GPU and MCH share a common reference clock (Default)

SUB_VENDOR	
0	No VBIOS ROM (Default)
1	BIOS ROM is present

3GIO_PADCFG	
3GIO_PADCFG[3:0]	
0000	Notebook Default

XCLK_417	
0	277MHz (Default)
1	Reserved

USER Straps	
User[3:0]	
1000-1100	Customer defined

PEX_PLL_EN_TERM	
0	Disable (Default)
1	Enable

PCIE_MAX_SPEED	
0	Limit to PCIE Gen1
1	PCIE Gen 2/3 Capable

FB_0_BAR_SIZE	
0	Reserved
1	Reserved
2	256MB (Default)
3	Reserved

SMBUS_ALT_ADDR	
0	0x9E (Default)
1	0x9C (Multi-GPU usage)

VGA_DEVICE	
0	3D Device (Class Code 302h)
1	VGA Device (Default)

X76

GPU	FB Memory (GDDR5)		ROM_SI	ROM_SO	ROM_SCLK	STRAP0	STRAP1	STRAP2	STRAP3	STRAP4
N13P-GT1 28nm	Samsung	K4G20325FD-FC04 2G 64Mx32	PD 30K	PU 10K	PD 15K (ROM not present) PD 35K (ROM present)	PU 45K	PD 5K	PD 25K	PU 5K	PD 45K
		K4G10325FG-HC04 1G 32Mx32	PD 45K							
	Hynix	H5GQ2H24MFR-T2C 2G 64Mx32 EOL	PD 25K							
		H5GQ1H24BFR-T2C 1G 32Mx32	PD 20K							
		H5GQ2H24AFR-T2C 2G 64Mx32	PD 25K							

VRAM	X76	VRAM P/N
Samsung	X76409JVL01 (2G 64Mx32)	SA00005B70J
	X76409JVL51 (1G 32Mx16)	SA00003RS0J
Hynix	X76409JVL02 (2G 64Mx32)	SA00004GD0J EOL
	X76409JVL02 (2G 64Mx32)	SA00004GD1J
	X76409JVL52 (1G 32Mx16)	SA00003WL1J

Security Classification	LC Future Center Secret Data		
Issued Date	2012/07/01	Deciphered Date	2014/07/01

THIS SHEET OF ENGINEERING DRAWING IS THE PROPRIETARY PROPERTY OF LC FUTURE CENTER. AND CONTAINS CONFIDENTIAL AND TRADE SECRET INFORMATION. THIS SHEET MAY NOT BE TRANSFERED FROM THE CUSTODY OF THE COMPETENT DIVISION OF R&D DEPARTMENT EXCEPT AS AUTHORIZED BY LC FUTURE CENTER NEITHER THIS SHEET NOR THE INFORMATION IT CONTAINS MAY BE USED BY OR DISCLOSED TO ANY THIRD PARTY WITHOUT PRIOR WRITTEN CONSENT OF LC FUTURE CENTER.

Title: N13P_MISC

Size: Custom | Document Number: Y501 NM-A032 | Rev: 1.0

Date: Wednesday, March 27, 2013 | Sheet 33 of 69

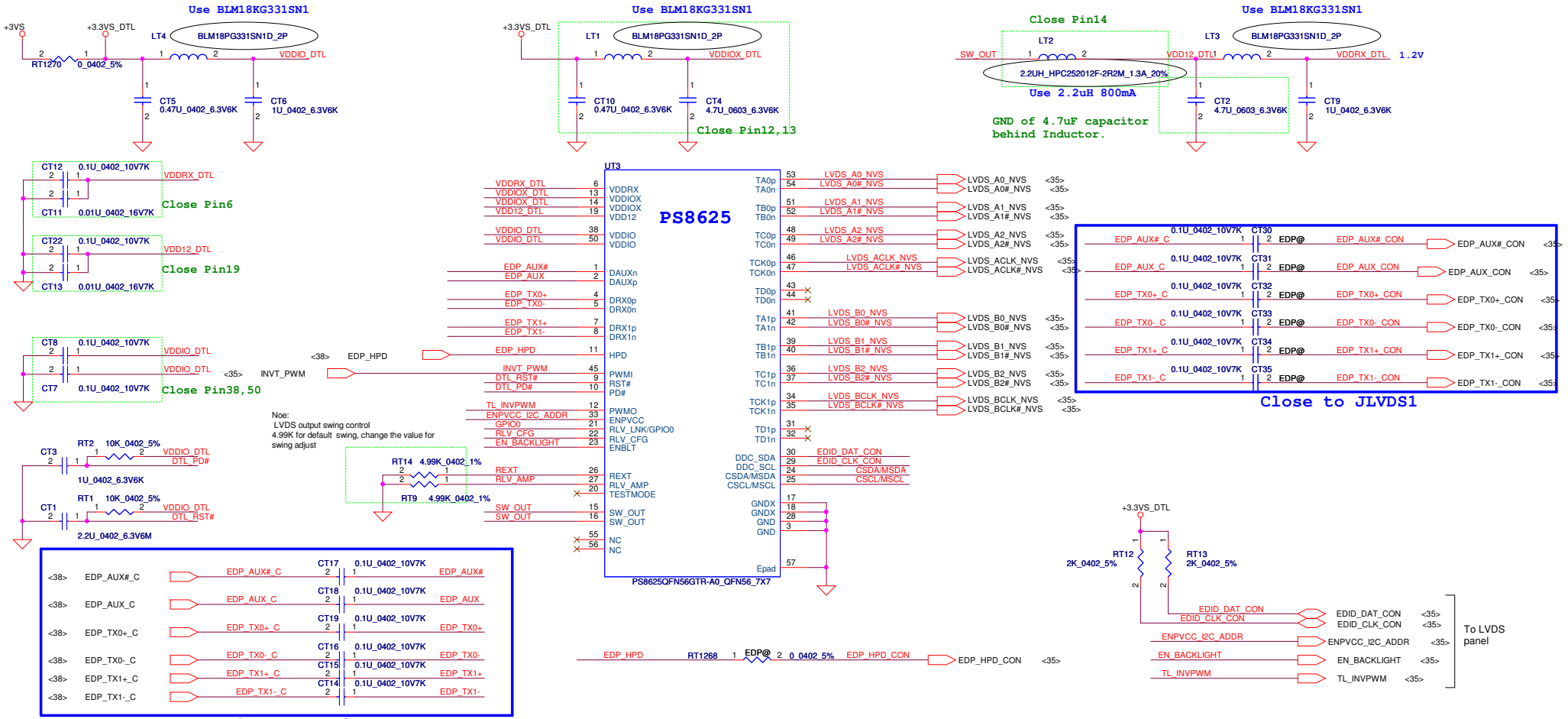

Default	RLV_CFG	RA	RB
*	H:6-bit both VESA and JEIDA mapping	Stuff	NA
	M:8-bit JEIDA mapping	NA	Stuff
	L:8-bit VESA mapping	NA	NA

Default	ENPVCC_I2C_ADDR	RC
	H:0x90h~0x9Fh	Stuff
*	L:0x10h~0x1Fh	NA

Default	GPIO0	RD
*	Single channel	NA
	Daul channel	Stuff

Security Classification	LC Future Center Secret Data		
Issued Date	2012/07/01	Deciphered Date	2014/07/01

THIS SHEET OF ENGINEERING DRAWING IS THE PROPRIETARY PROPERTY OF LC FUTURE CENTER. AND CONTAINS CONFIDENTIAL AND TRADE SECRET INFORMATION. THIS SHEET MAY NOT BE TRANSFERED FROM THE CUSTODY OF THE COMPETENT DIVISION OF R&D DEPARTMENT EXCEPT AS AUTHORIZED BY LC FUTURE CENTER NEITHER THIS SHEET NOR THE INFORMATION IT CONTAINS MAY BE USED BY OR DISCLOSED TO ANY THIRD PARTY WITHOUT PRIOR WRITTEN CONSENT OF LC FUTURE CENTER.

Title: LVDS/ CMOS/ USB-ReDriver

Size: Custom | Document Number: Y501 NM-A032 | Rev: 1.0

Date: Wednesday, March 27, 2013 | Sheet 34 of 69

WWW.AliSaler.Com

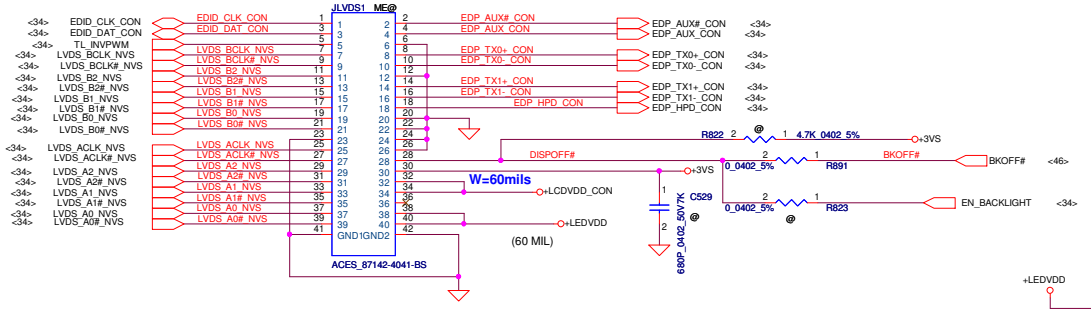

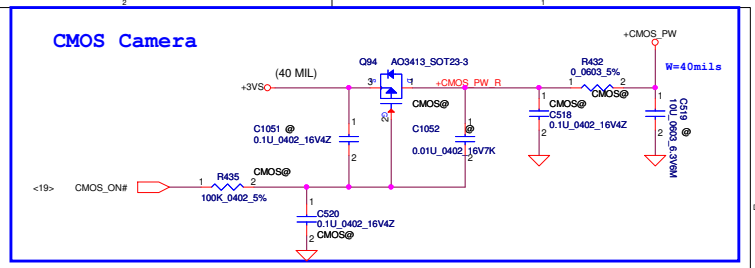

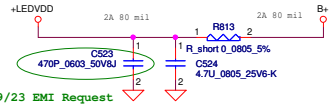

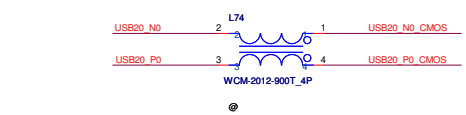

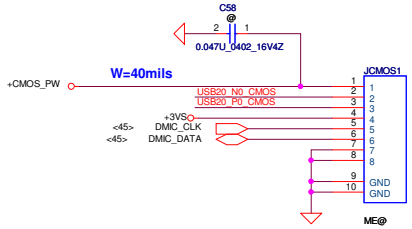

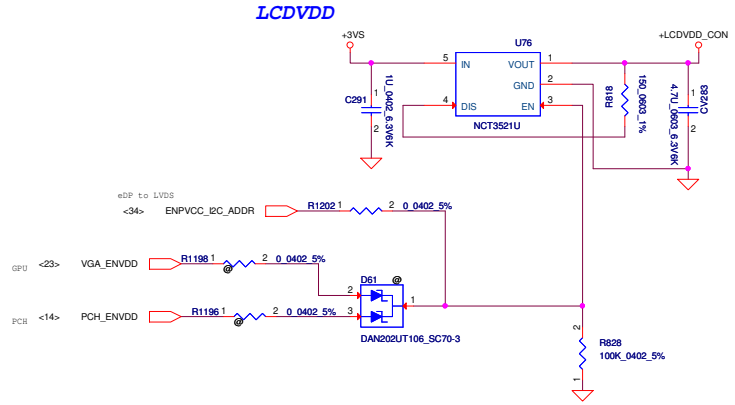

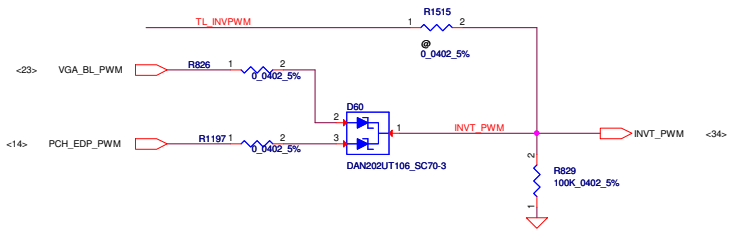

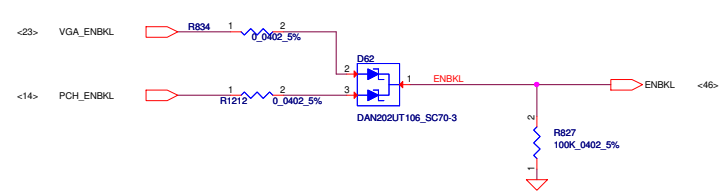

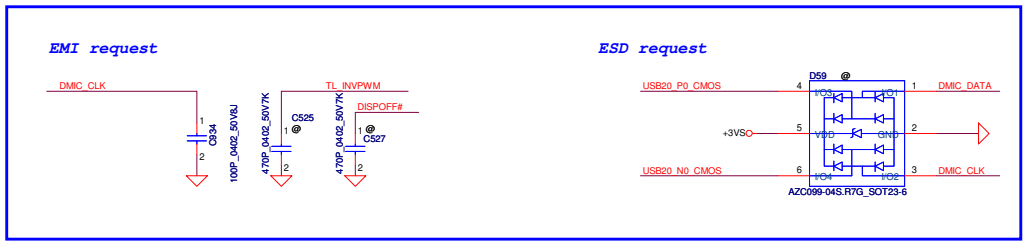

LVDS LOAD SWITCH
1.9mS Typical Rise time ,Rds_on 80m ohm

Security Classification	LC Future Center Secret Data		
Issued Date	2012/07/01	Deciphered Date	2014/07/01

THIS SHEET OF ENGINEERING DRAWING IS THE PROPRIETARY PROPERTY OF LC FUTURE CENTER. AND CONTAINS CONFIDENTIAL AND TRADE SECRET INFORMATION. THIS SHEET MAY NOT BE TRANSFERED FROM THE CUSTODY OF THE COMPETENT DIVISION OF R&D DEPARTMENT EXCEPT AS AUTHORIZED BY LC FUTURE CENTER NEITHER THIS SHEET NOR THE INFORMATION IT CONTAINS MAY BE USED BY OR DISCLOSED TO ANY THIRD PARTY WITHOUT PRIOR WRITTEN CONSENT OF LC FUTURE CENTER.

Title: *LVDS/ CMOS/ USB-ReDriver*

Size: Custom | Document Number: *Y501 NM-A032* | Rev: 1.0

Date: Wednesday, March 27, 2013 | Sheet 35 of 69

CRT Connector

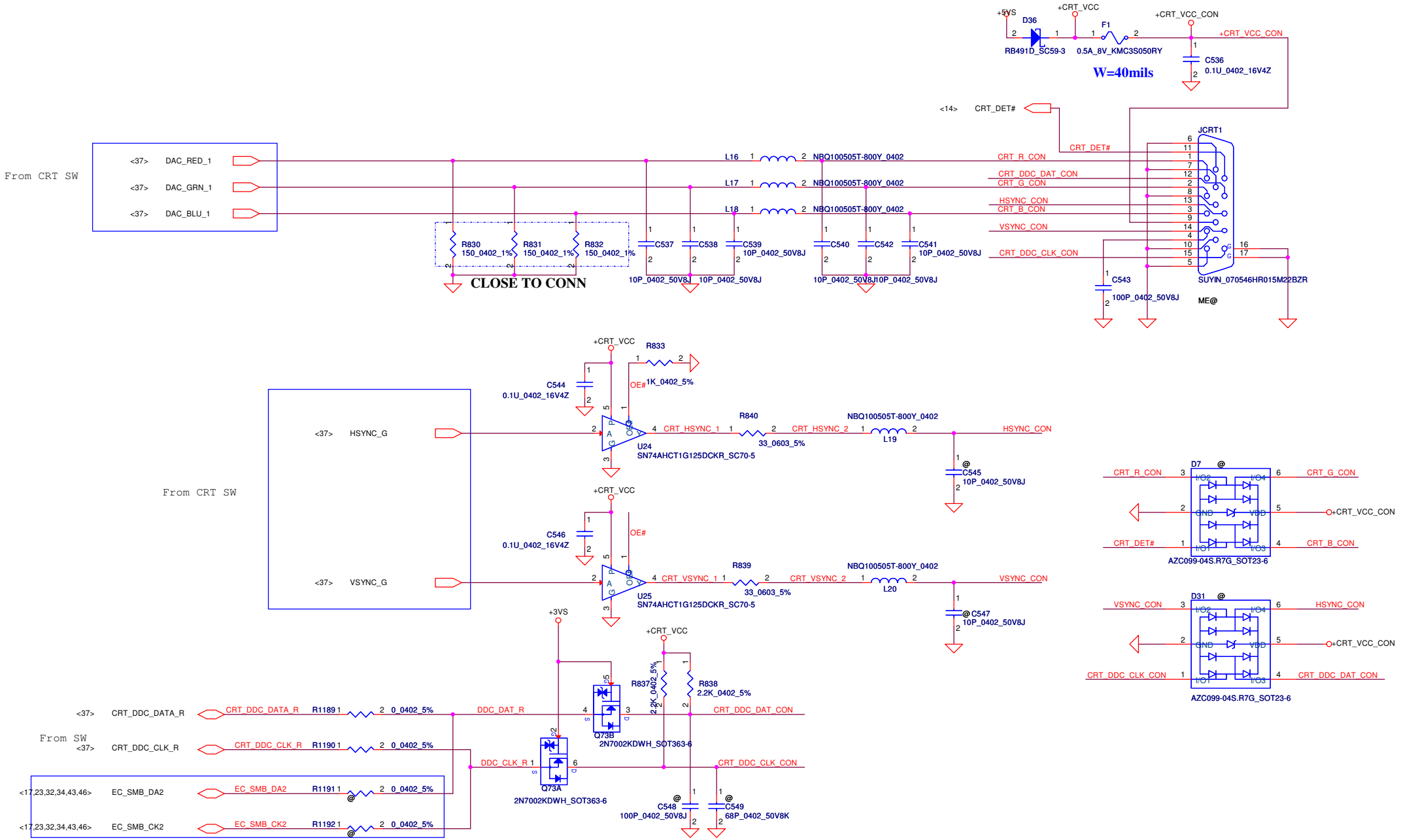

Security Classification	LC Future Center Secret Data		
Issued Date	2012/07/01	Deciphered Date	2014/07/01

THIS SHEET OF ENGINEERING DRAWING IS THE PROPRIETARY PROPERTY OF LC FUTURE CENTER. AND CONTAINS CONFIDENTIAL AND TRADE SECRET INFORMATION. THIS SHEET MAY NOT BE TRANSFERED FROM THE CUSTODY OF THE COMPETENT DIVISION OF R&D DEPARTMENT EXCEPT AS AUTHORIZED BY LC FUTURE CENTER NEITHER THIS SHEET NOR THE INFORMATION IT CONTAINS MAY BE USED BY OR DISCLOSED TO ANY THIRD PARTY WITHOUT PRIOR WRITTEN CONSENT OF LC FUTURE CENTER.

Title: CRT Connector

Size: Custom | Document Number: Y501 NM-A032 | Rev: 1.0

Date: Wednesday, March 27, 2013 | Sheet 36 of 69

WWW.AliSaler.Com

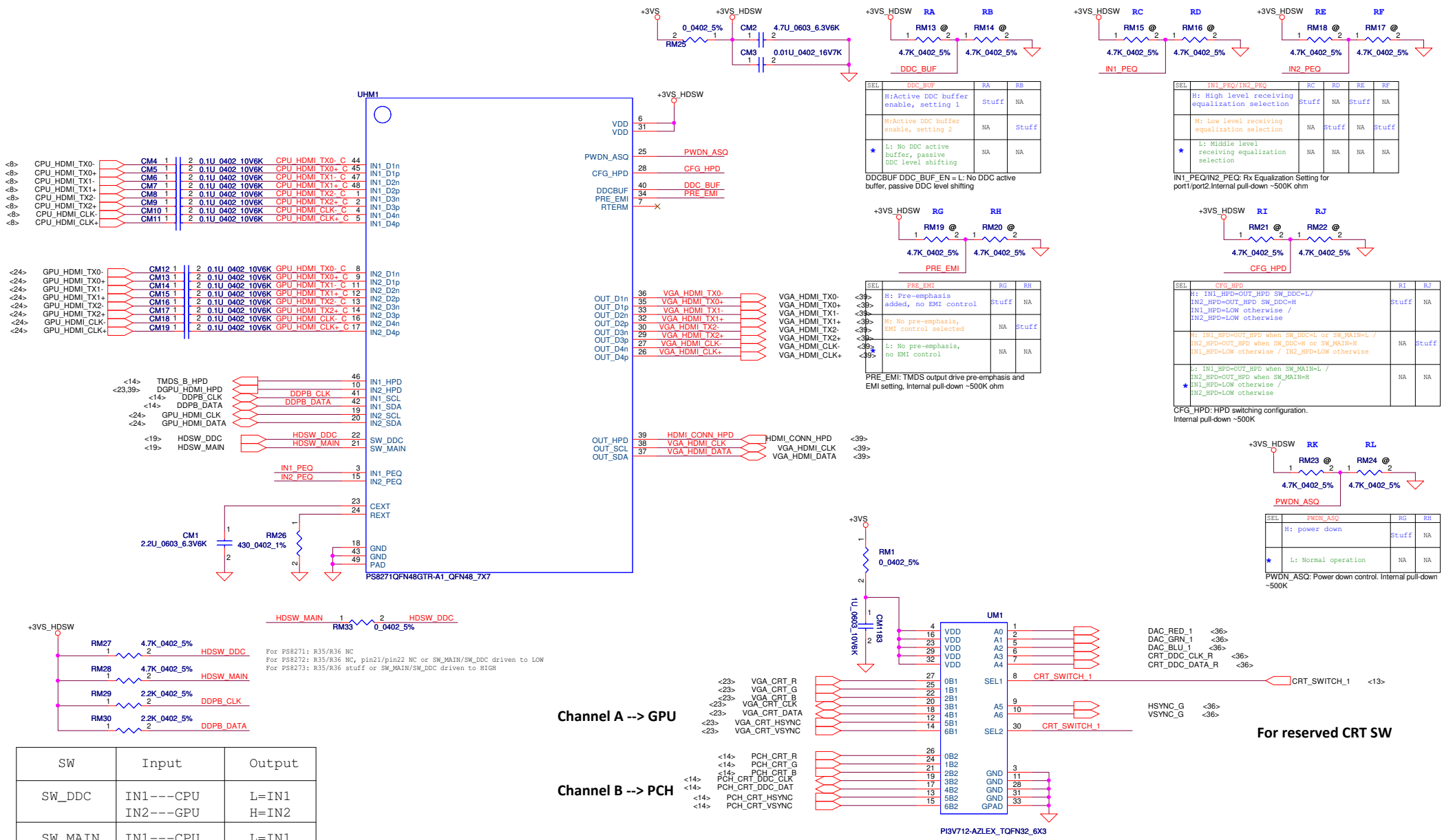

SW	Input	Output
SW_DDC	IN1---CPU IN2---GPU	L=IN1 H=IN2
SW_MAIN	IN1---CPU IN2---GPU	L=IN1 H=IN2

Input SELx	Input/Output An	Function
L	nB1--GPU	An=nB1
H	nB2---PCH	An=nB2

Security Classification	LC Future Center Secret Data		
Issued Date	2012/07/01	Deciphered Date	2014/07/01

THIS SHEET OF ENGINEERING DRAWING IS THE PROPRIETARY PROPERTY OF LC FUTURE CENTER. AND CONTAINS CONFIDENTIAL AND TRADE SECRET INFORMATION. THIS SHEET MAY NOT BE TRANSFERED FROM THE CUSTODY OF THE COMPETENT DIVISION OF R&D DEPARTMENT EXCEPT AS AUTHORIZED BY LC FUTURE CENTER NEITHER THIS SHEET NOR THE INFORMATION IT CONTAINS MAY BE USED BY OR DISCLOSED TO ANY THIRD PARTY WITHOUT PRIOR WRITTEN CONSENT OF LC FUTURE CENTER.

Title: HDMI and CRT SW

Size: Custom | Document Number: Y501 NM-A032 | Rev: 1.0

Date: Wednesday, March 27, 2013 | Sheet 37 of 69

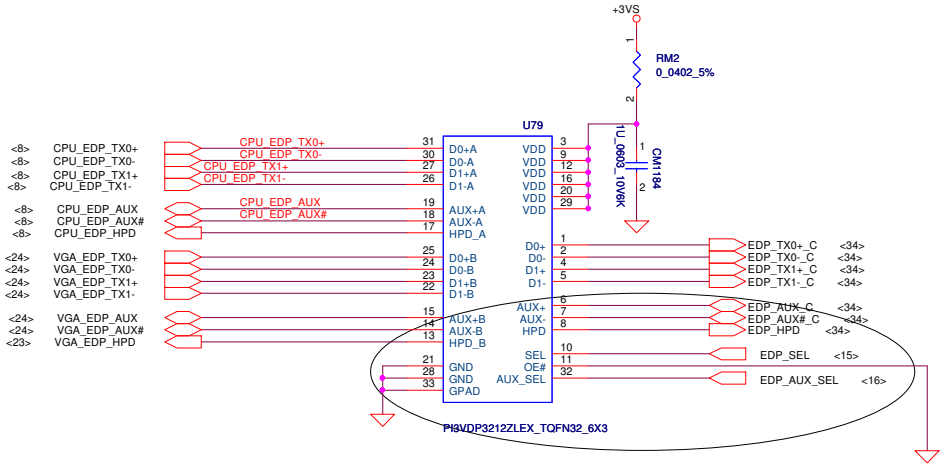

OE#	SEL	AUX_SEL	FUNCTION
L	L	L	PORT A
L	L	H	PORT A-HS, PORT B-HPD/AUX
L	H	L	PORT B-HS, PORT A-HPD/AUX
L	H	H	PORT B
H	X	X	IC POWER DOWN

Security Classification	LC Future Center Secret Data		
Issued Date	2012/07/01	Deciphered Date	2014/07/01

THIS SHEET OF ENGINEERING DRAWING IS THE PROPRIETARY PROPERTY OF LC FUTURE CENTER. AND CONTAINS CONFIDENTIAL AND TRADE SECRET INFORMATION. THIS SHEET MAY NOT BE TRANSFERED FROM THE CUSTODY OF THE COMPETENT DIVISION OF R&D DEPARTMENT EXCEPT AS AUTHORIZED BY LC FUTURE CENTER NEITHER THIS SHEET NOR THE INFORMATION IT CONTAINS MAY BE USED BY OR DISCLOSED TO ANY THIRD PARTY WITHOUT PRIOR WRITTEN CONSENT OF LC FUTURE CENTER.

Title: LVDS/ CMOS/ USB-ReDriver

Size: Custom | Document Number: Y501 NM-A032 | Rev: 1.0

Date: Wednesday, March 27, 2013 | Sheet 38 of 69

WWW.AliSaler.Com

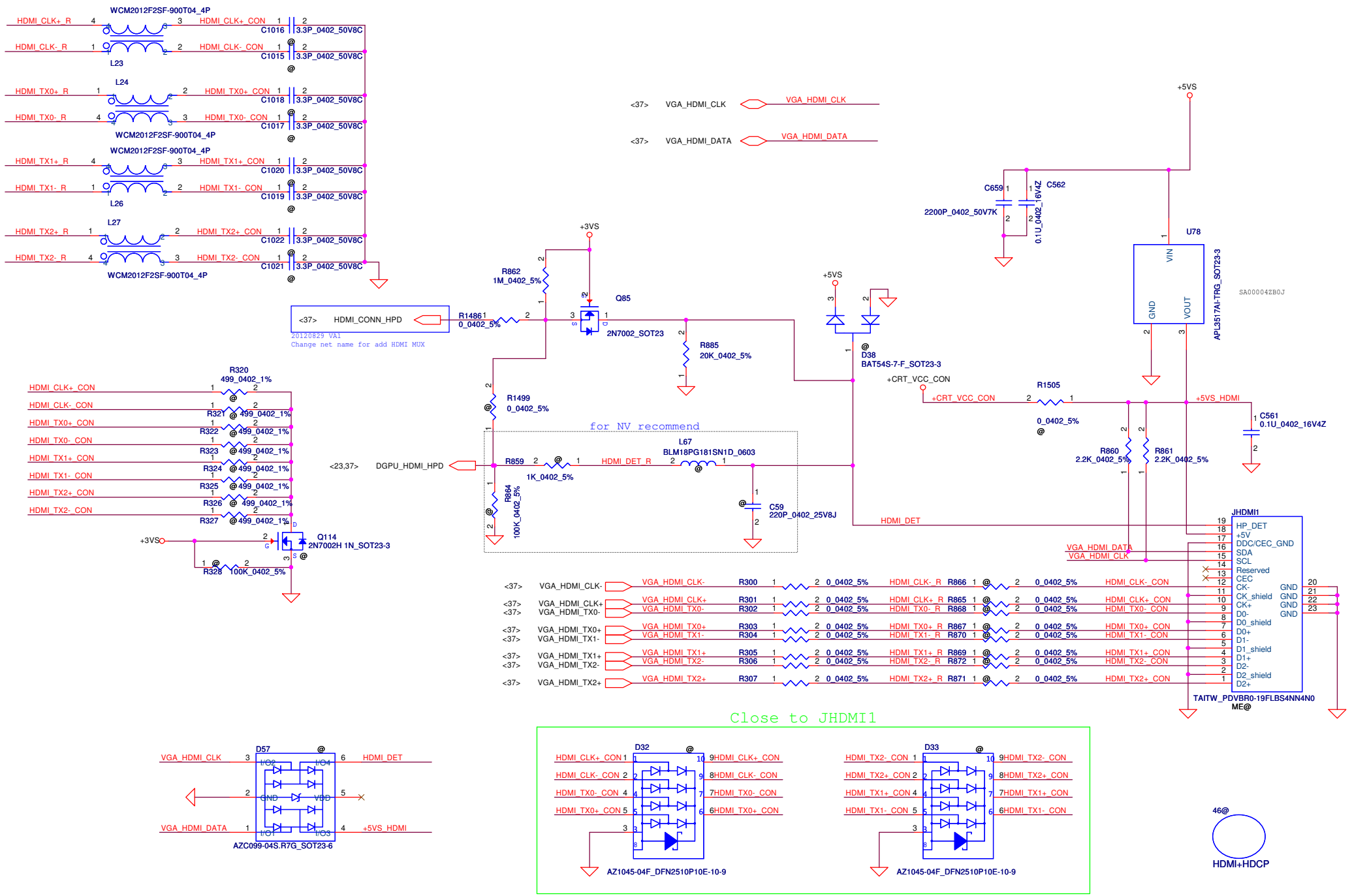

Security Classification	LC Future Center Secret Data		
Issued Date	2012/07/01	Deciphered Date	2014/07/01

THIS SHEET OF ENGINEERING DRAWING IS THE PROPRIETARY PROPERTY OF LC FUTURE CENTER. AND CONTAINS CONFIDENTIAL AND TRADE SECRET INFORMATION. THIS SHEET MAY NOT BE TRANSFERED FROM THE CUSTODY OF THE COMPETENT DIVISION OF R&D DEPARTMENT EXCEPT AS AUTHORIZED BY LC FUTURE CENTER NEITHER THIS SHEET NOR THE INFORMATION IT CONTAINS MAY BE USED BY OR DISCLOSED TO ANY THIRD PARTY WITHOUT PRIOR WRITTEN CONSENT OF LC FUTURE CENTER.

Title: HDMI_CONN

Size: Custom | Document Number: Y501 NM-A032 | Rev: 1.0

Date: Wednesday, March 27, 2013 | Sheet 39 of 69

Mini-Express Card(WLAN/WiMAX)

9/18 JP1 Pin2,24,52 contact to +3VS_WLAN for AOAC function

Reserve for SW mini-pcie debug card.
Series resistors closed to KBC side.

LPC_FRAME# R	R873	1	@	2 0 0402 5%	LPC_FRAME#	LPC_FRAME# <17,46>
LPC_AD3 R	R874	1	@	2 0 0402 5%	LPC_AD3	LPC_AD3 <17,46>
LPC_AD2 R	R875	1	@	2 0 0402 5%	LPC_AD2	LPC_AD2 <17,46>
LPC_AD1 R	R876	1	@	2 0 0402 5%	LPC_AD1	LPC_AD1 <17,46>
LPC_AD0 R	R878	1	@	2 0 0402 5%	LPC_AD0	LPC_AD0 <17,46>
PCI_RST# R	R879	1	@	2 0 0402 5%	PLT_RST#	
CLK_PCI_DB						CLK_PCI_DB <16>

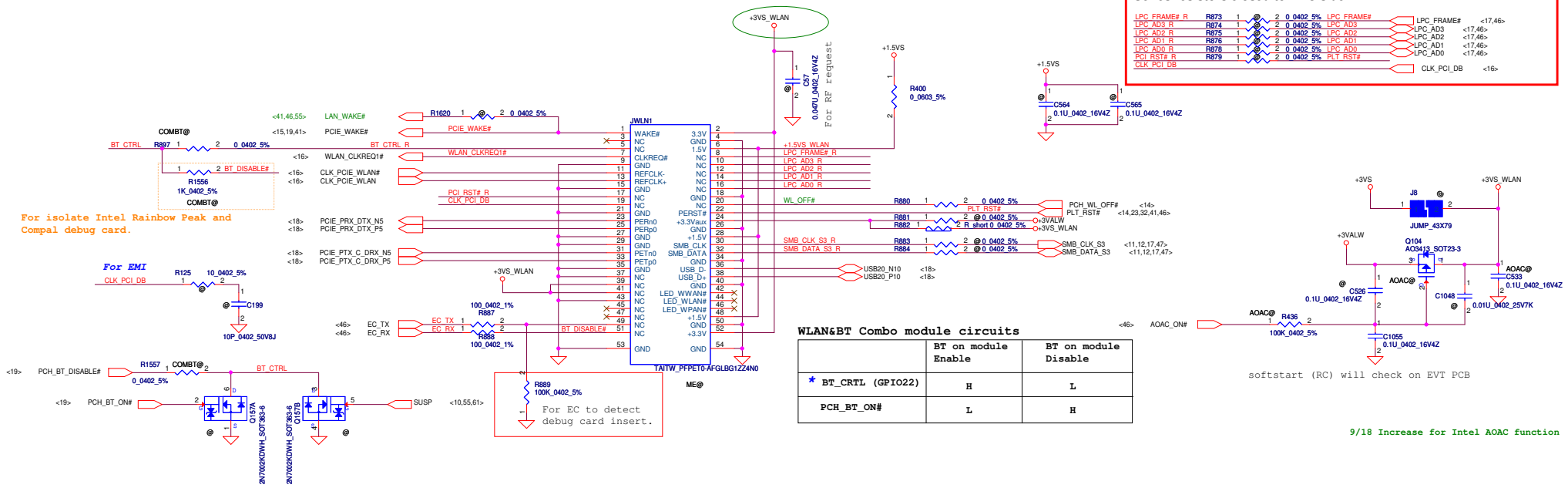

WLAN&BT Combo module circuits

	BT on module Enable	BT on module Disable
* BT_CRTL (GPIO22)	H	L
PCH_BT_ON#	L	H

NGFF(SSD)

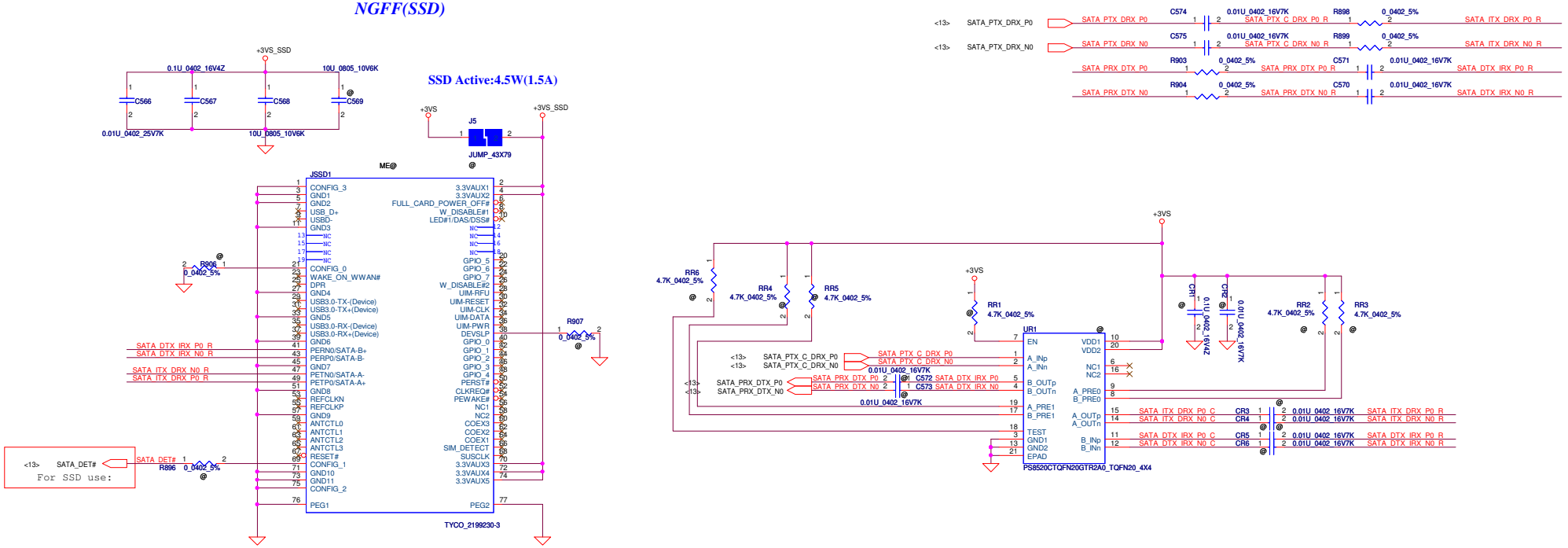

Security Classification	LC Future Center Secret Data		
Issued Date	2012/07/01	Deciphered Date	2014/07/01

THIS SHEET OF ENGINEERING DRAWING IS THE PROPRIETARY PROPERTY OF LC FUTURE CENTER. AND CONTAINS CONFIDENTIAL AND TRADE SECRET INFORMATION. THIS SHEET MAY NOT BE TRANSFERRED FROM THE CUSTODY OF THE COMPETENT DIVISION OF R&D DEPARTMENT EXCEPT AS AUTHORIZED BY LC FUTURE CENTER NEITHER THIS SHEET NOR THE INFORMATION IT CONTAINS MAY BE USED BY OR DISCLOSED TO ANY THIRD PARTY WITHOUT PRIOR WRITTEN CONSENT OF LC FUTURE CENTER.

Title: Mini-Card

Size C | Document Number: Y501 NW-A032 | Rev 1.0

Date: Wednesday, March 27, 2013 | Sheet 40 of 69

WWW.AliSaler.Com

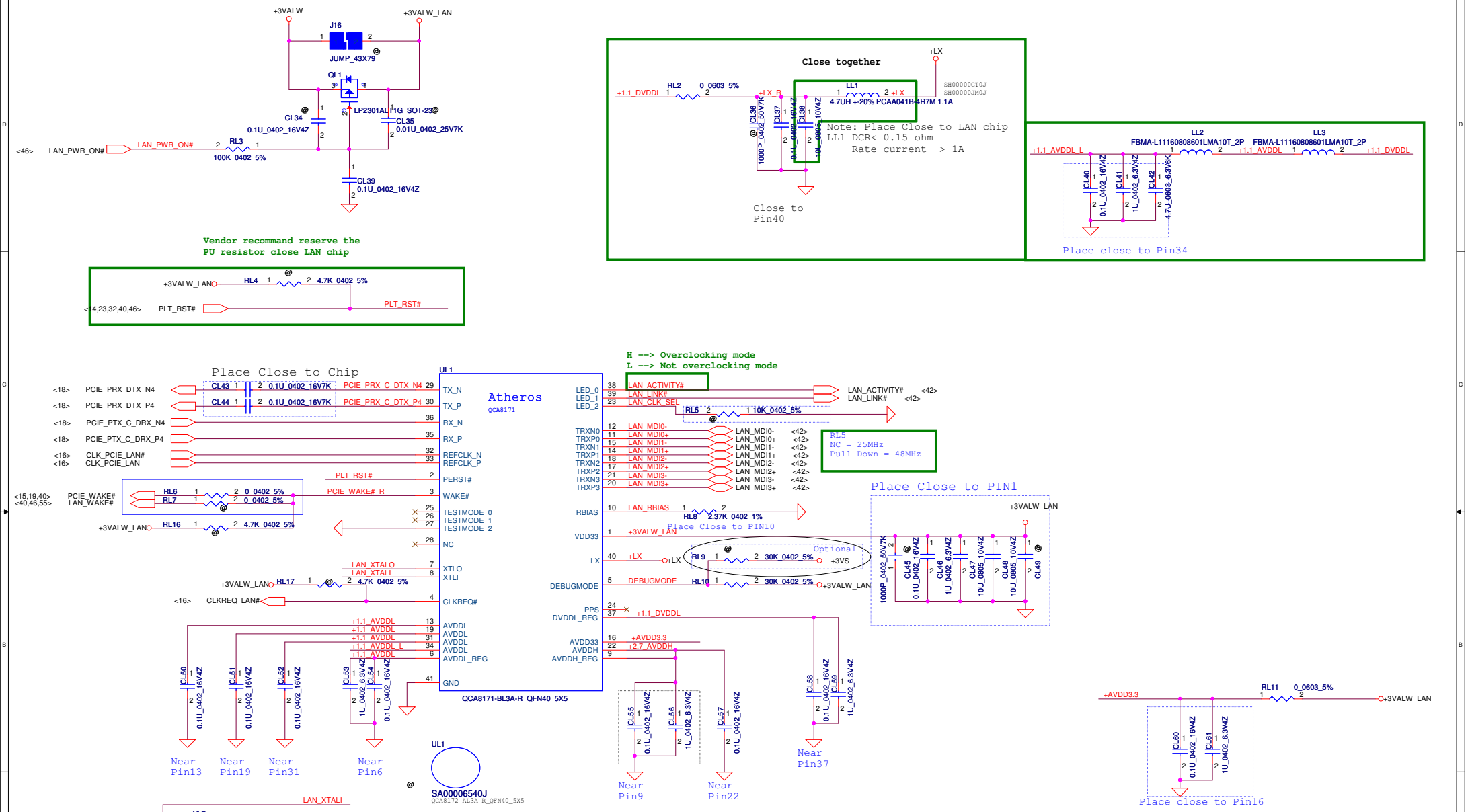

QCA8171/72 Pin defination difference.

	Pin17	Pin18	Pin19	Pin20	Pin21
QCA8171	LAN_MDI2+	LAN_MDI2-	+1.1_AVDDL	LAN_MDI3+	LAN_MDI3-
QCA8172	NC	NC	NC	NC	NC

Security Classification	LC Future Center Secret Data		
Issued Date	2012/07/01	Deciphered Date	2014/07/01

THIS SHEET OF ENGINEERING DRAWING IS THE PROPRIETARY PROPERTY OF LC FUTURE CENTER. AND CONTAINS CONFIDENTIAL AND TRADE SECRET INFORMATION. THIS SHEET MAY NOT BE TRANSFERED FROM THE CUSTODY OF THE COMPETENT DIVISION OF R&D, DEPARTMENT EXCEPT AS AUTHORIZED BY LC FUTURE CENTER NEITHER THIS SHEET NOR THE INFORMATION IT CONTAINS MAY BE USED BY OR DISCLOSED TO ANY THIRD PARTY WITHOUT PRIOR WRITTEN CONSENT OF LC FUTURE CENTER.

Title: LAN_QCA8171

Size: Custom | Document Number: Y501 NM-A032 | Rev: 1.0

Date: Wednesday, March 27, 2013 | Sheet 41 of 69

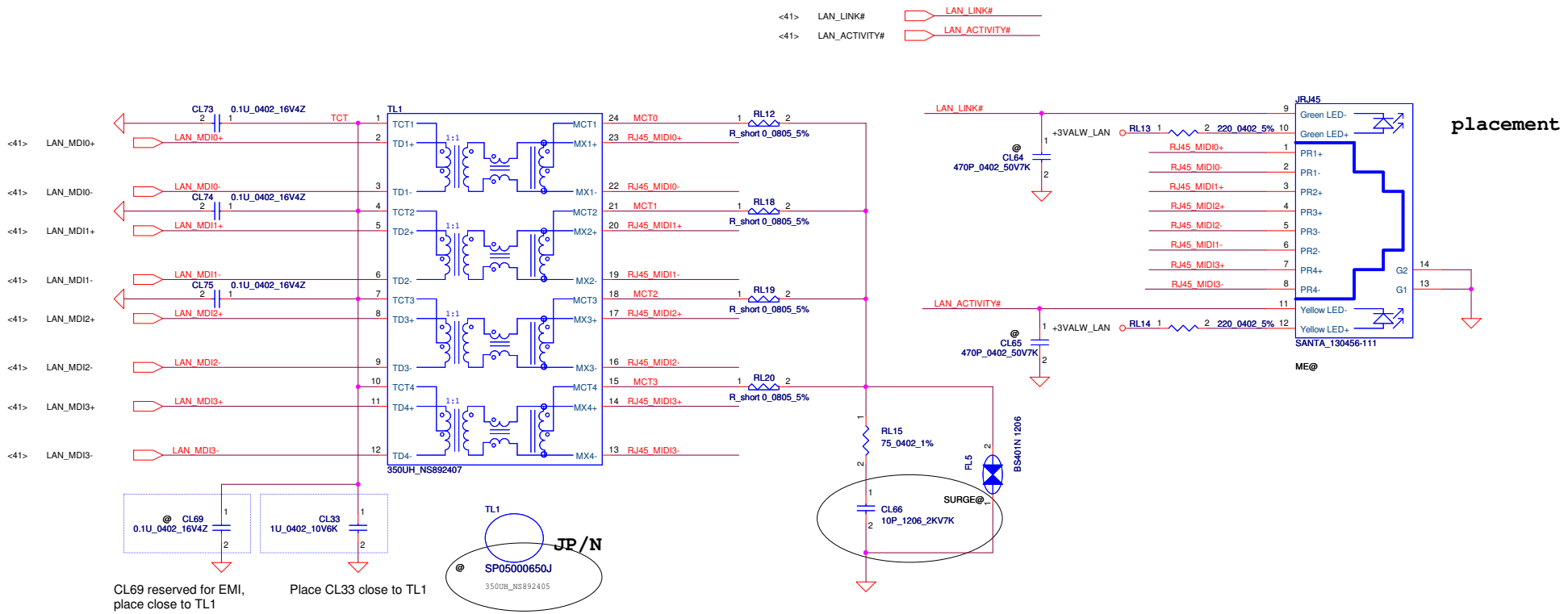

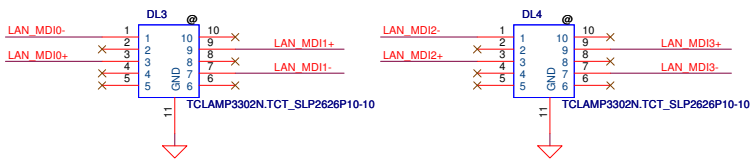

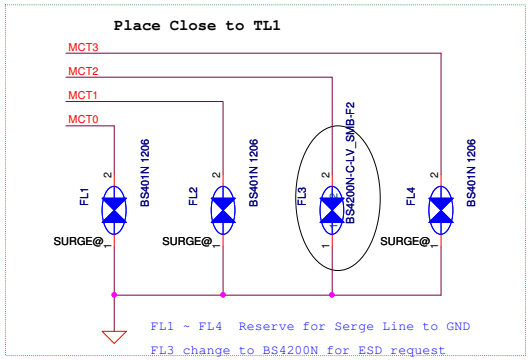

Security Classification	LC Future Center Secret Data		
Issued Date	2012/07/01	Deciphered Date	2014/07/01

THIS SHEET OF ENGINEERING DRAWING IS THE PROPRIETARY PROPERTY OF LC FUTURE CENTER. AND CONTAINS CONFIDENTIAL AND TRADE SECRET INFORMATION. THIS SHEET MAY NOT BE TRANSFERED FROM THE CUSTODY OF THE COMPETENT DIVISION OF R&D DEPARTMENT EXCEPT AS AUTHORIZED BY LC FUTURE CENTER NEITHER THIS SHEET NOR THE INFORMATION IT CONTAINS MAY BE USED BY OR DISCLOSED TO ANY THIRD PARTY WITHOUT PRIOR WRITTEN CONSENT OF LC FUTURE CENTER.

Title: **LAN Transformer**

Size: Custom | Document Number: Y501 NM-A032 | Rev: 1.0

Date: Wednesday, March 27, 2013 | Sheet 42 of 69

WWW.AliSaler.Com

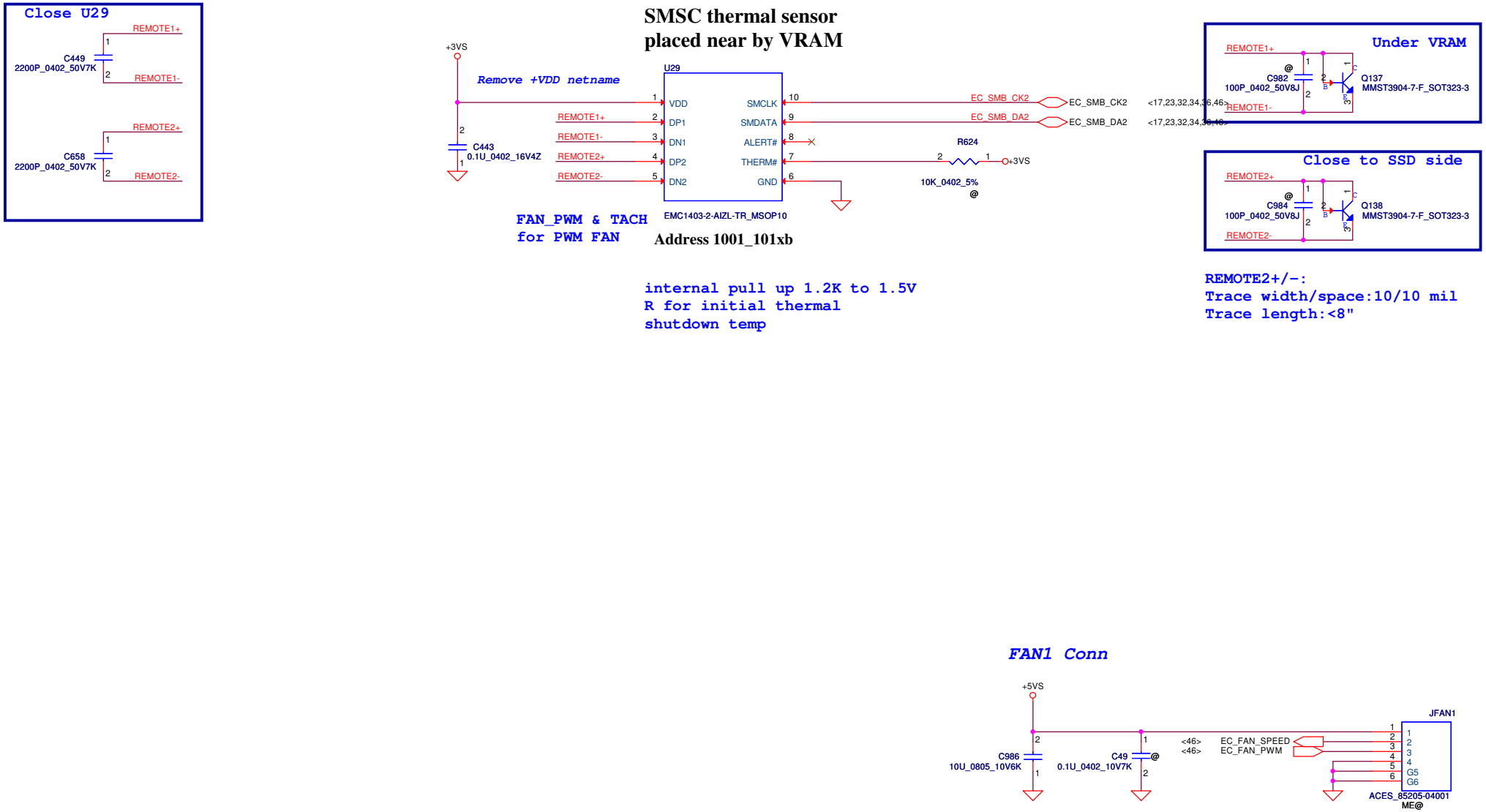

Security Classification	LC Future Center Secret Data		
Issued Date	2012/07/01	Deciphered Date	2014/07/01

THIS SHEET OF ENGINEERING DRAWING IS THE PROPRIETARY PROPERTY OF LC FUTURE CENTER. AND CONTAINS CONFIDENTIAL AND TRADE SECRET INFORMATION. THIS SHEET MAY NOT BE TRANSFERED FROM THE CUSTODY OF THE COMPETENT DIVISION OF R&D DEPARTMENT EXCEPT AS AUTHORIZED BY LC FUTURE CENTER NEITHER THIS SHEET NOR THE INFORMATION IT CONTAINS MAY BE USED BY OR DISCLOSED TO ANY THIRD PARTY WITHOUT PRIOR WRITTEN CONSENT OF LC FUTURE CENTER.

Title: VGA Thermal sensor/FAN CONN

Size: Custom | Document Number: Y501 NM-A032 | Rev: 1.0

Date: Wednesday, March 27, 2013 | Sheet 43 of 69

SATA HDD Conn.

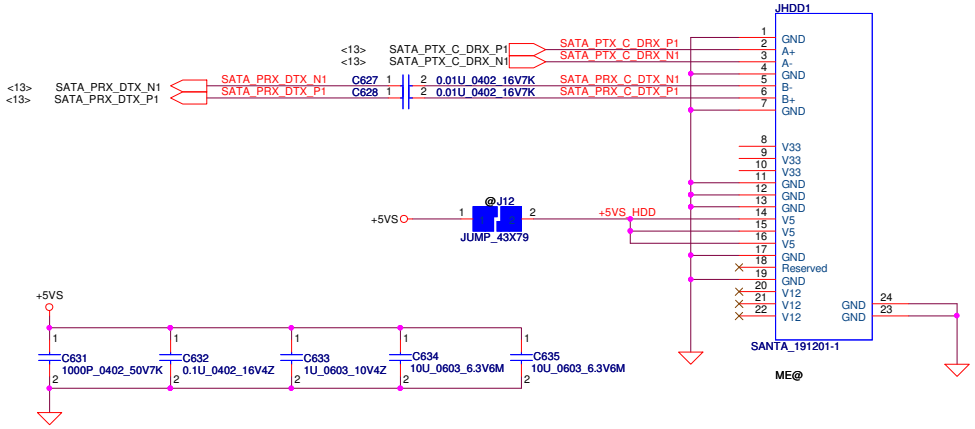

SATA ODD Conn.

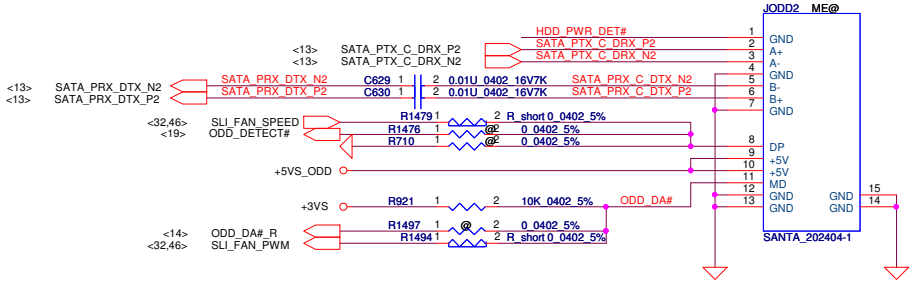

ODD Power Control

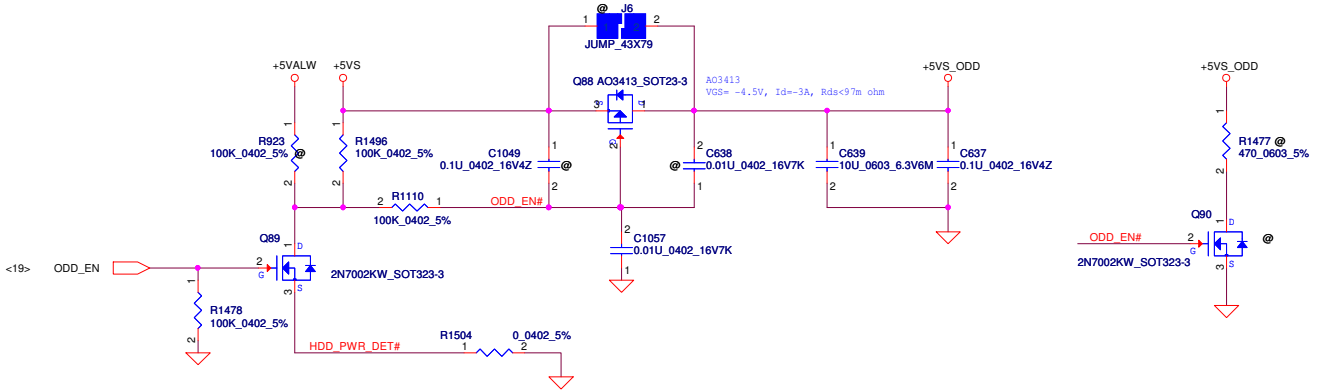

Security Classification	LC Future Center Secret Data		
Issued Date	2012/07/01	Deciphered Date	2014/07/01

THIS SHEET OF ENGINEERING DRAWING IS THE PROPRIETARY PROPERTY OF LC FUTURE CENTER. AND CONTAINS CONFIDENTIAL AND TRADE SECRET INFORMATION. THIS SHEET MAY NOT BE TRANSFERED FROM THE CUSTODY OF THE COMPETENT DIVISION OF R&D, DEPARTMENT EXCEPT AS AUTHORIZED BY LC FUTURE CENTER NEITHER THIS SHEET NOR THE INFORMATION IT CONTAINS MAY BE USED BY OR DISCLOSED TO ANY THIRD PARTY WITHOUT PRIOR WRITTEN CONSENT OF LC FUTURE CENTER.

Title: HDD/ODD CONN

Size: Custom | Document Number: Y501 NM-A032 | Rev: 1.0

Date: Wednesday, March 27, 2013 | Sheet 44 of 69

WWW.AliSaler.Com

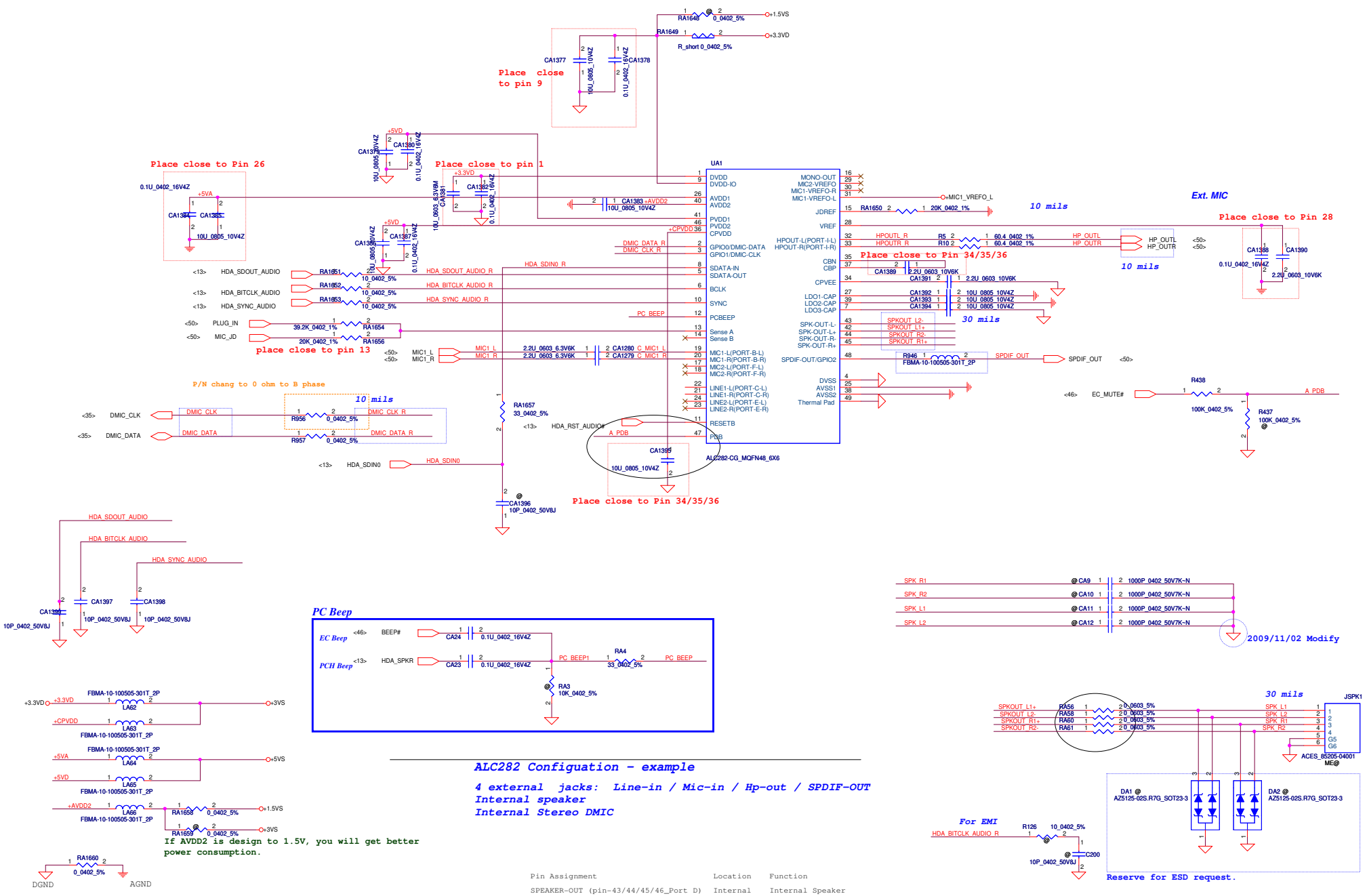

Pin Assignment	Location	Function
SPEAKER-OUT (pin-43/44/45/46_Port D)	Internal	Internal Speaker
Cap-Saving HP-OUT (pin-32/33_Port I)	External	Headphone out
LINE1 (pin-21/22_Port C)	External	Line in
MIC1 (pin-19/20_Port B)	External	Mic in
MONO-OUT (pin-16)		
MIC2 (pin-17/18_Port F)		
DMIC1/2 (pin-2/3)		

Security Classification	LC Future Center Secret Data		
Issued Date	2012/05/02	Deciphered Date	2012/5/02

THIS SHEET OF ENGINEERING DRAWING IS THE PROPRIETARY PROPERTY OF LC FUTURE CENTER. AND CONTAINS CONFIDENTIAL AND TRADE SECRET INFORMATION. THIS SHEET MAY NOT BE TRANSFERRED FROM THE CUSTODY OF THE COMPETENT DIVISION OF R&D DEPARTMENT EXCEPT AS AUTHORIZED BY LC FUTURE CENTER NEITHER THIS SHEET NOR THE INFORMATION IT CONTAINS MAY BE USED BY OR DISCLOSED TO ANY THIRD PARTY WITHOUT PRIOR WRITTEN CONSENT OF LC FUTURE CENTER.

Title: **Audio Codec**

Size: C | Document Number: Y501 NM-A032 | Rev: 1.0

Date: Wednesday, March 27, 2013 | Sheet 45 of 69

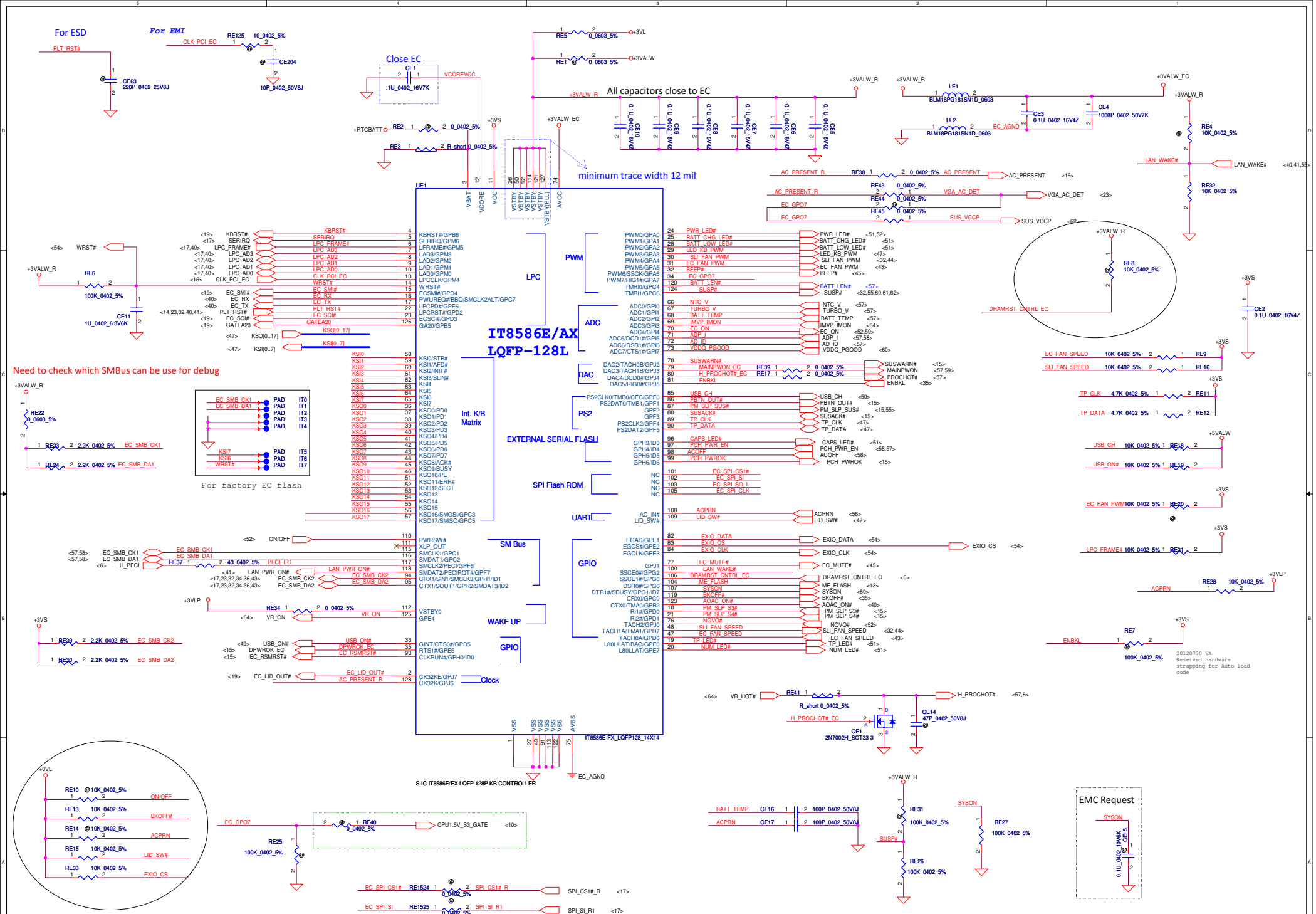

WWW.AliSaler.Com

15" INT_KBD Conn.

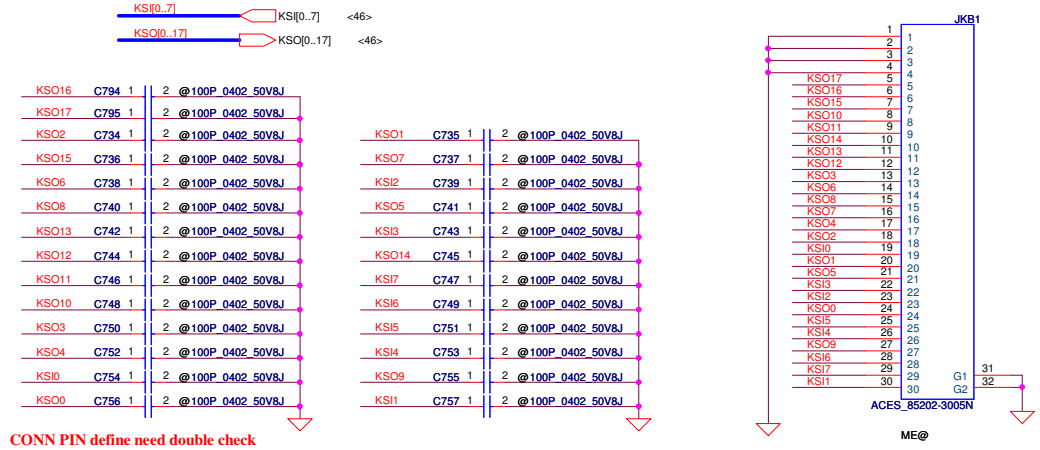

CONN PIN define need double check

KB Lighting CONN.4pin

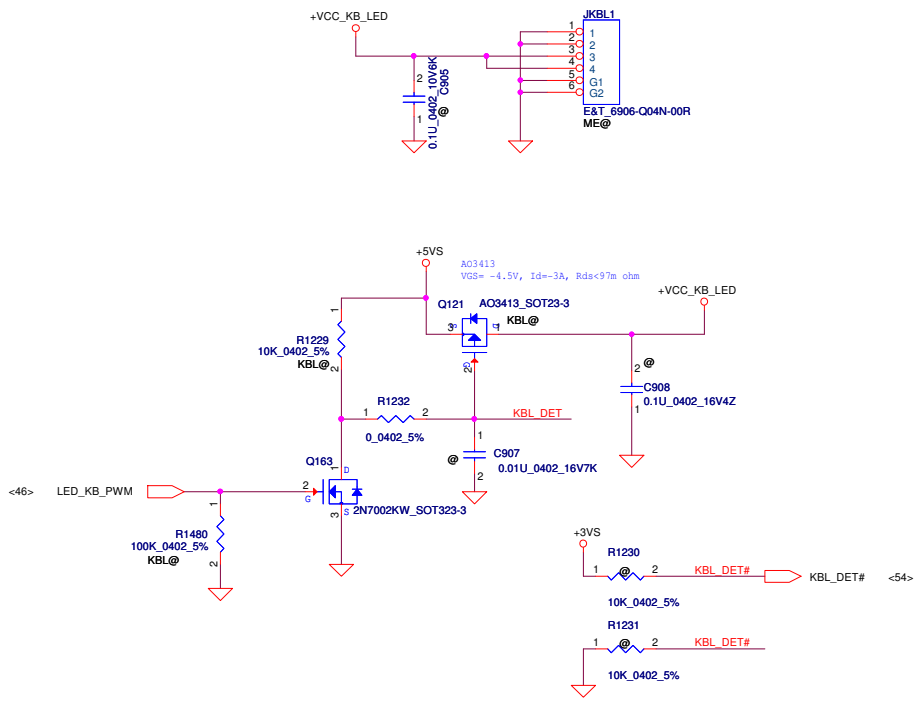

To TP/B Conn.

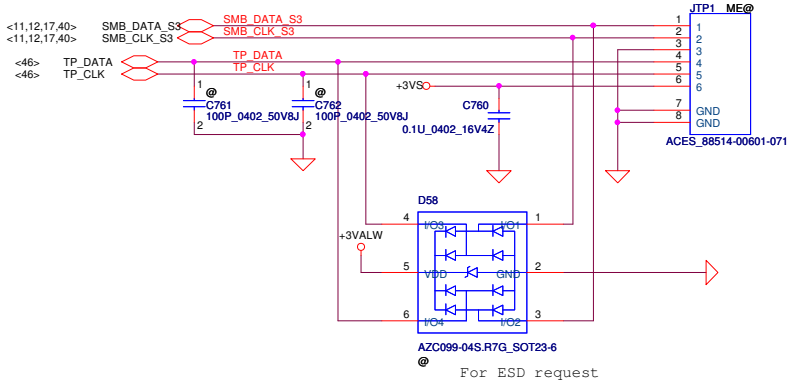

For ESD request

Lid Switch

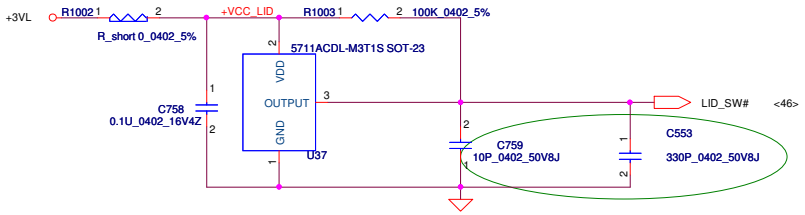

For ESD Request

Security Classification	LC Future Center Secret Data		
Issued Date	2012/07/01	Deciphered Date	2014/07/01

THIS SHEET OF ENGINEERING DRAWING IS THE PROPRIETARY PROPERTY OF LC FUTURE CENTER. AND CONTAINS CONFIDENTIAL AND TRADE SECRET INFORMATION. THIS SHEET MAY NOT BE TRANSFERED FROM THE CUSTODY OF THE COMPETENT DIVISION OF R&D, DEPARTMENT EXCEPT AS AUTHORIZED BY LC FUTURE CENTER NEITHER THIS SHEET NOR THE INFORMATION IT CONTAINS MAY BE USED BY OR DISCLOSED TO ANY THIRD PARTY WITHOUT PRIOR WRITTEN CONSENT OF LC FUTURE CENTER.

Title: KB/ KB-LIGHT/ LID IC

Size: Custom | Document Number: Y501 NM-A032 | Rev: 1.0

Date: Wednesday, March 27, 2013 | Sheet 47 of 69

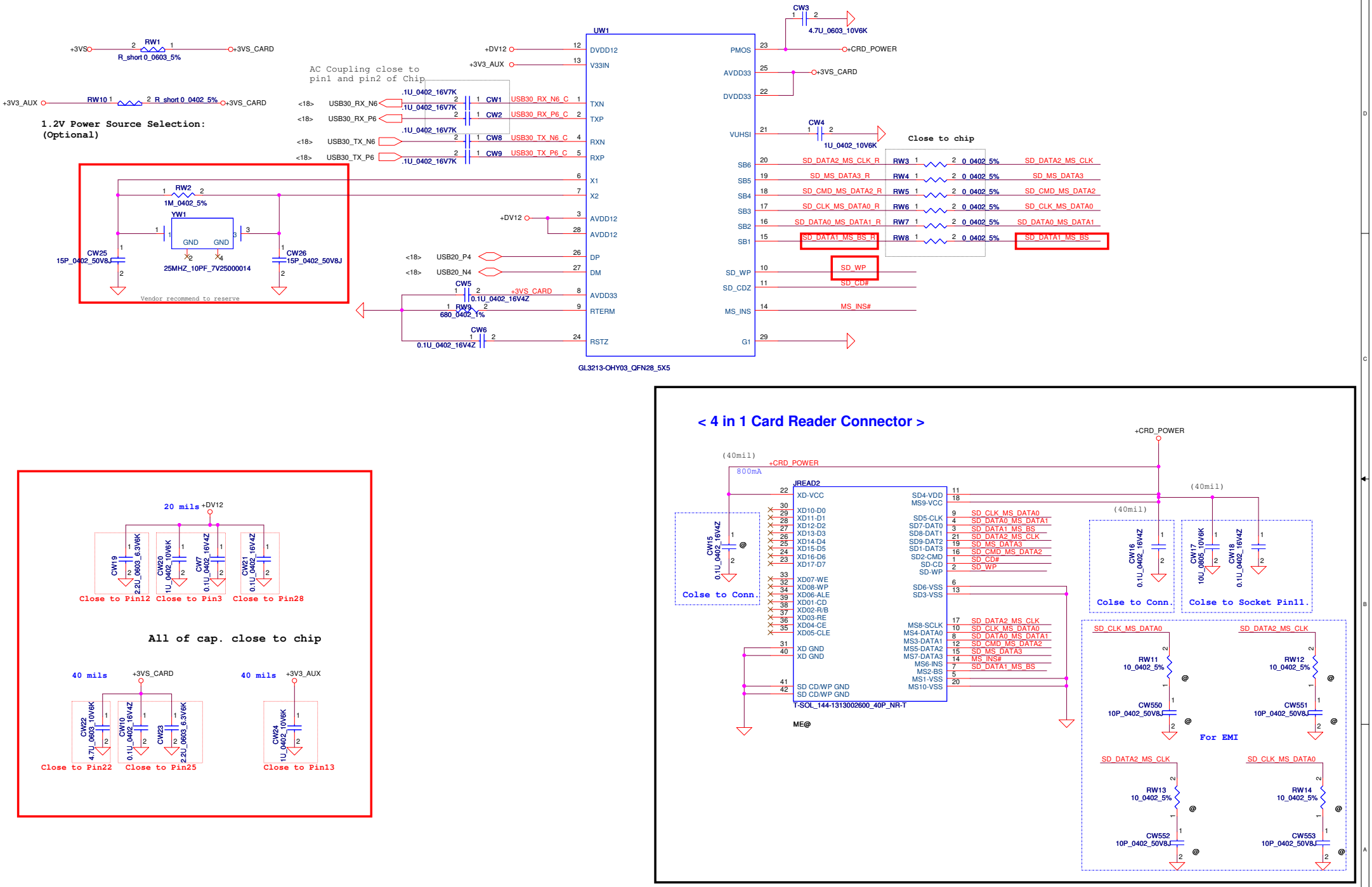

Security Classification	LC Future Center Secret Data		
Issued Date	2012/07/01	Deciphered Date	2014/07/01

THIS SHEET OF ENGINEERING DRAWING IS THE PROPRIETARY PROPERTY OF LC FUTURE CENTER. AND CONTAINS CONFIDENTIAL AND TRADE SECRET INFORMATION. THIS SHEET MAY NOT BE TRANSFERED FROM THE CUSTODY OF THE COMPETENT DIVISION OF R&D DEPARTMENT EXCEPT AS AUTHORIZED BY LC FUTURE CENTER NEITHER THIS SHEET NOR THE INFORMATION IT CONTAINS MAY BE USED BY OR DISCLOSED TO ANY THIRD PARTY WITHOUT PRIOR WRITTEN CONSENT OF LC FUTURE CENTER.

Title: Card reader GL3213

LCFC

Size: Custom | Document Number: Y501 NM-A032 | Rev: 1.0

Date: Wednesday, March 27, 2013 | Sheet 48 of 69

WWW.AliSaler.Com

LEFT SIDE USB3.0 PORT X1

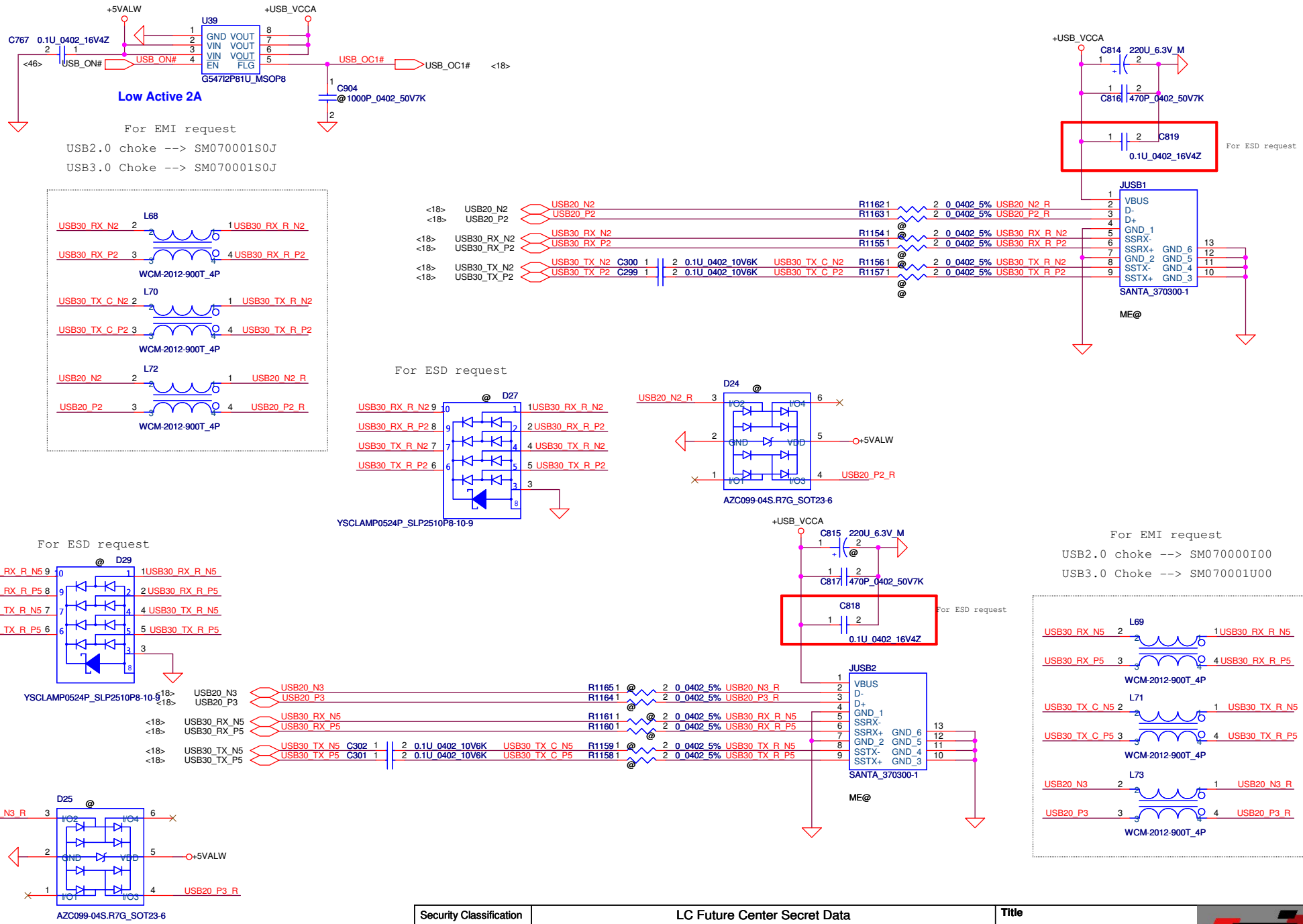

Security Classification	LC Future Center Secret Data		
Issued Date	2012/07/01	Deciphered Date	2014/07/01

THIS SHEET OF ENGINEERING DRAWING IS THE PROPRIETARY PROPERTY OF LC FUTURE CENTER. AND CONTAINS CONFIDENTIAL AND TRADE SECRET INFORMATION. THIS SHEET MAY NOT BE TRANSFERED FROM THE CUSTODY OF THE COMPETENT DIVISION OF R&D DEPARTMENT EXCEPT AS AUTHORIZED BY LC FUTURE CENTER NEITHER THIS SHEET NOR THE INFORMATION IT CONTAINS MAY BE USED BY OR DISCLOSED TO ANY THIRD PARTY WITHOUT PRIOR WRITTEN CONSENT OF LC FUTURE CENTER.

Title: USB 3.0 PORT (LEFT)

Size: Custom | Document Number: Y501 NM-A032 | Rev: 1.0

Date: Wednesday, March 27, 2013 | Sheet 49 of 69

Touch panel

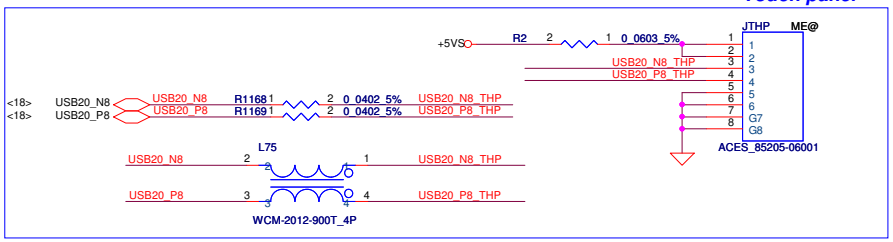

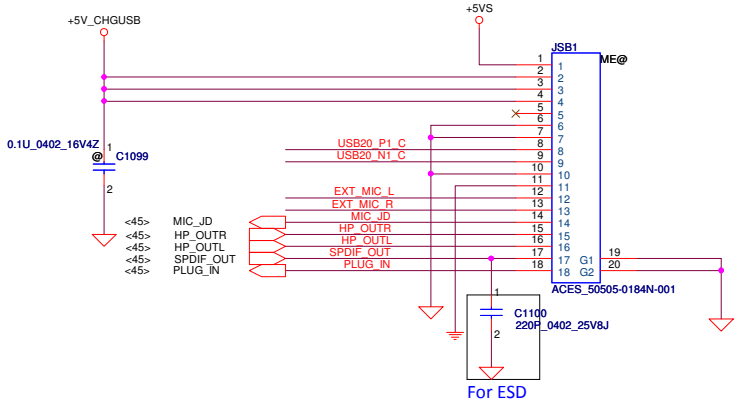

Sleep & Charge
Right side USB Charger Port (USB_Port5, near JMIC1)

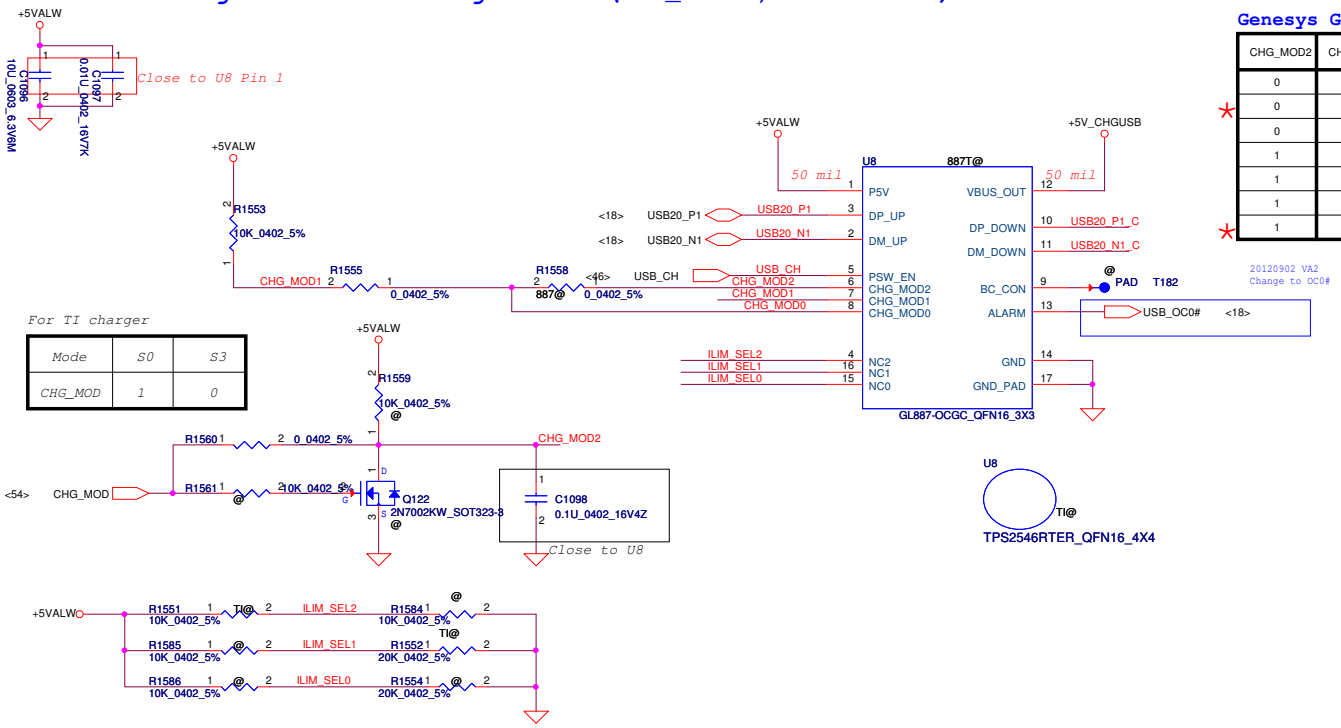

Mode	S0	S3
CHG_MOD	1	0

Genesys GL887

CHG_MOD2	CHG_MOD1	CHG_MOD0	Charge Mode
0	0	0	Charge Disable
0	1	0	CDP mode
0	1	1	DCP mode
1	0	0	Apple 1A mode
1	0	1	Apple 2A mode
1	1	0	Auto mode (DCP and Apple 1A)
1	1	1	Auto mode (DCP and Apple 2A)

Genesys GL887T

CHG_MOD2	CHG_MOD1	CHG_MOD0	Charge Mode
0	0	0	Power down mode
0	0	1	Auto 2A mode without wake up function
X	1	0	BC1.2 SDP mode
0	1	1	Auto 2A mode with wake up function
1	0	0	BC1.2 DCP mode
1	0	1	Apple 2A mode
1	1	1	BC1.2 CDP mode with Smart CDP

TI TPS2543

CHG_MOD2	CHG_MOD1	CHG_MOD0	ILIM_SEL2	MODE
0	0	0	X	DCH OUT held low /Data lines disconnected
1	1	1	1	CDP Data connected and Load detect active
1	1	1	0	SDP2 Data connected
1	1	0	X	SDP1 Data connected
0	1	0	X	SDP1 Data connected
1	0	0	X	DCP_Short Stay in DCP BC1.2 Charging mode
1	0	1	X	DCP_Divider Stay in DCP Divider1 Charging mode
0	1	1	X	DCP_Auto Data disconnected and Load detect active
0	0	1	X	DCP_Auto Data disconnected and Load detect active

Ext. MIC

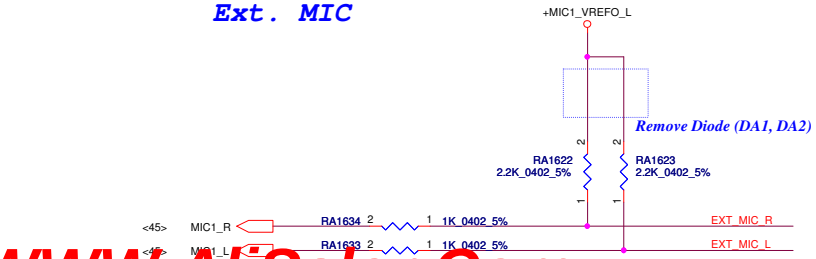

WWW.AliSaler.Com

Security Classification	LC Future Center Secret Data		
Issued Date	2012/07/01	Deciphered Date	2014/07/01

THIS SHEET OF ENGINEERING DRAWING IS THE PROPRIETARY PROPERTY OF LC FUTURE CENTER. AND CONTAINS CONFIDENTIAL AND TRADE SECRET INFORMATION. THIS SHEET MAY NOT BE TRANSFERED FROM THE CUSTODY OF THE COMPETENT DIVISION OF R&D, DEPARTMENT EXCEPT AS AUTHORIZED BY LC FUTURE CENTER NEITHER THIS SHEET NOR THE INFORMATION IT CONTAINS MAY BE USED BY OR DISCLOSED TO ANY THIRD PARTY WITHOUT PRIOR WRITTEN CONSENT OF LC FUTURE CENTER.

Title: AUDIO-B CONN/ USB CHARGER

Size: Custom | Document Number: Y501 NM-A032 | Rev: 1.0

Date: Wednesday, March 27, 2013 | Sheet 50 of 69

BATT CHARGE/LOW LED

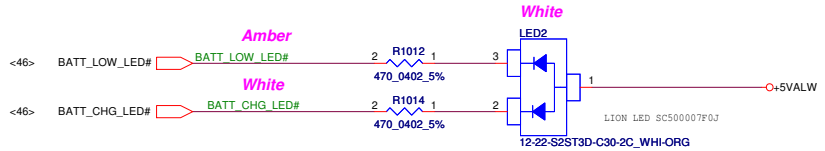

PWR LED HDD LED CapsLK LED

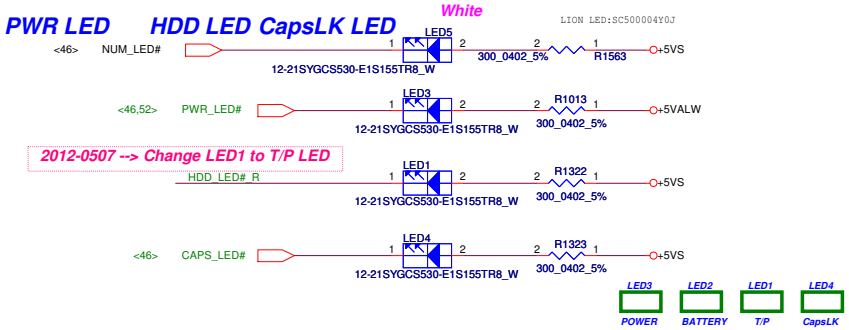

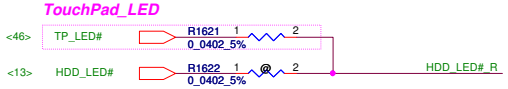

Screw Hole

CPU and GPU: H_3P8X 6

C: H_3P8X 3

B: H_3P8X 3

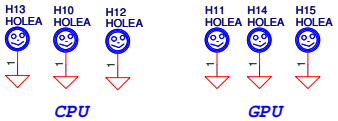

MIN PCIE: H_3P3 X 1

E: H_3P3X 1

ME: H_8P0 X 8; H_3P3X 1; H_4P0X3P0N X 2; H_2P0X 1

A: H_2P8X 8

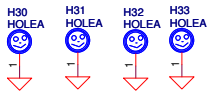

H_3P0X9

E: H_3P3X 3

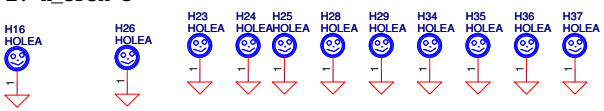

H_2P8X4P0NX1

PCB Fedical Mark PAD

Security Classification	LC Future Center Secret Data		
Issued Date	2012/07/01	Deciphered Date	2014/07/01

THIS SHEET OF ENGINEERING DRAWING IS THE PROPRIETARY PROPERTY OF LC FUTURE CENTER. AND CONTAINS CONFIDENTIAL AND TRADE SECRET INFORMATION. THIS SHEET MAY NOT BE TRANSFERED FROM THE CUSTODY OF THE COMPETENT DIVISION OF R&D DEPARTMENT EXCEPT AS AUTHORIZED BY LC FUTURE CENTER NEITHER THIS SHEET NOR THE INFORMATION IT CONTAINS MAY BE USED BY OR DISCLOSED TO ANY THIRD PARTY WITHOUT PRIOR WRITTEN CONSENT OF LC FUTURE CENTER.

Title: LED

LCFC

Size	Document Number	Rev
Custom	Y501 NM-A032	1.0

Date: Wednesday, March 27, 2013 Sheet 51 of 69

ON/OFF switch

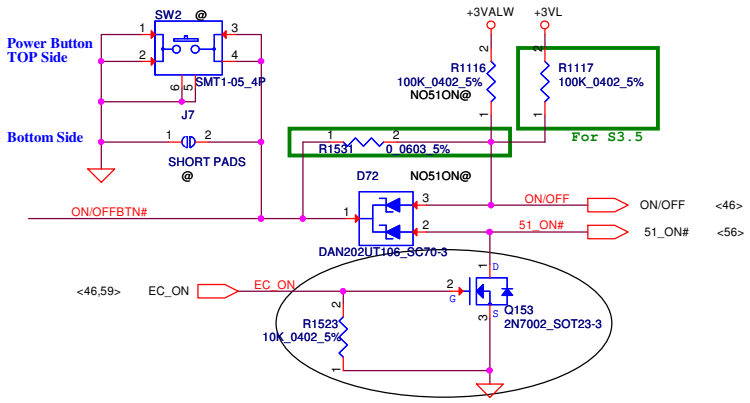

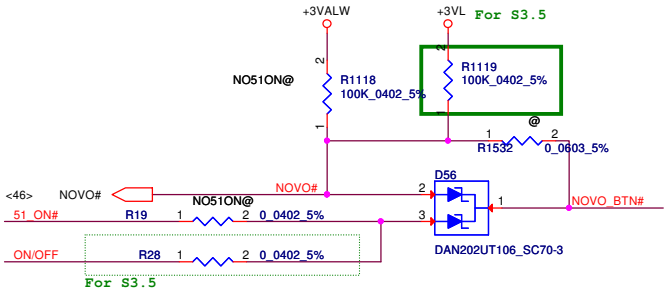

NO51ON@ default reserved

Power Button/B link to Function/B Conn. 10pin

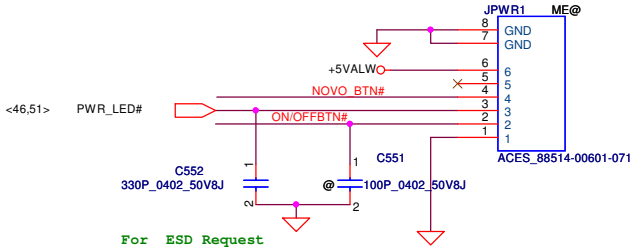

EMI REQUEST 1ST = SCA00000E00
2ST = SCA00000R00

Security Classification	LC Future Center Secret Data		
Issued Date	2012/07/01	Deciphered Date	2014/07/01

THIS SHEET OF ENGINEERING DRAWING IS THE PROPRIETARY PROPERTY OF LC FUTURE CENTER. AND CONTAINS CONFIDENTIAL AND TRADE SECRET INFORMATION. THIS SHEET MAY NOT BE TRANSFERED FROM THE CUSTODY OF THE COMPETENT DIVISION OF R&D DEPARTMENT EXCEPT AS AUTHORIZED BY LC FUTURE CENTER NEITHER THIS SHEET NOR THE INFORMATION IT CONTAINS MAY BE USED BY OR DISCLOSED TO ANY THIRD PARTY WITHOUT PRIOR WRITTEN CONSENT OF LC FUTURE CENTER.

Title: ONOFF SW/ PWR-B CONN/ ISPD

Size: Custom | Document Number: Y501 NM-A032 | Rev: 1.0

Date: Wednesday, March 27, 2013 | Sheet 52 of 69

WWW.AliSaler.Com

Security Classification	Compal Secret Data		
Issued Date	2011/07/21	Deciphered Date	2012/12/31

THIS SHEET OF ENGINEERING DRAWING IS THE PROPRIETARY PROPERTY OF COMPAL ELECTRONICS, INC. AND CONTAINS CONFIDENTIAL AND TRADE SECRET INFORMATION. THIS SHEET MAY NOT BE TRANSFERED FROM THE CUSTODY OF THE COMPETENT DIVISION OF R&D DEPARTMENT EXCEPT AS AUTHORIZED BY COMPAL ELECTRONICS, INC. NEITHER THIS SHEET NOR THE INFORMATION IT CONTAINS MAY BE USED BY OR DISCLOSED TO ANY THIRD PARTY WITHOUT PRIOR WRITTEN CONSENT OF COMPAL ELECTRONICS, INC.

Title: ***NVSR***

Size	Document Number	Rev
C	***Y501 NM-A032***	1.0

Date: Wednesday, March 27, 2013 | Sheet 53 of 69

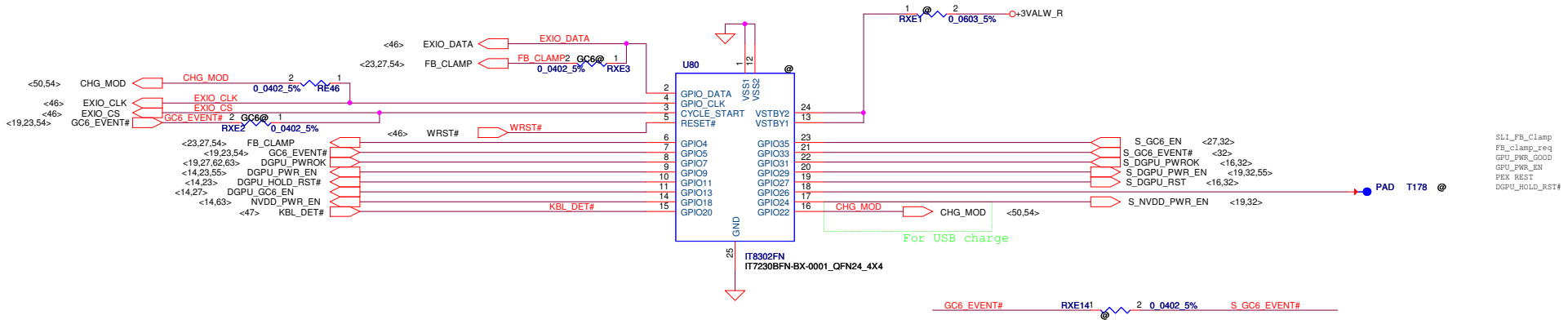

Security Classification	LC Future Center Secret Data		
Issued Date	2012/07/01	Deciphered Date	2014/07/01

THIS SHEET OF ENGINEERING DRAWING IS THE PROPRIETARY PROPERTY OF LC FUTURE CENTER. AND CONTAINS CONFIDENTIAL AND TRADE SECRET INFORMATION. THIS SHEET MAY NOT BE TRANSFERED FROM THE CUSTODY OF THE COMPETENT DIVISION OF R&D DEPARTMENT EXCEPT AS AUTHORIZED BY LC FUTURE CENTER NEITHER THIS SHEET NOR THE INFORMATION IT CONTAINS MAY BE USED BY OR DISCLOSED TO ANY THIRD PARTY WITHOUT PRIOR WRITTEN CONSENT OF LC FUTURE CENTER.

Title: EX IO

Size: Custom | Document Number: Y501 NM-A032 | Rev: 1.0

Date: Wednesday, March 27, 2013 | Sheet 54 of 69

WWW.AliSaler.Com

+5VALW to +5VS

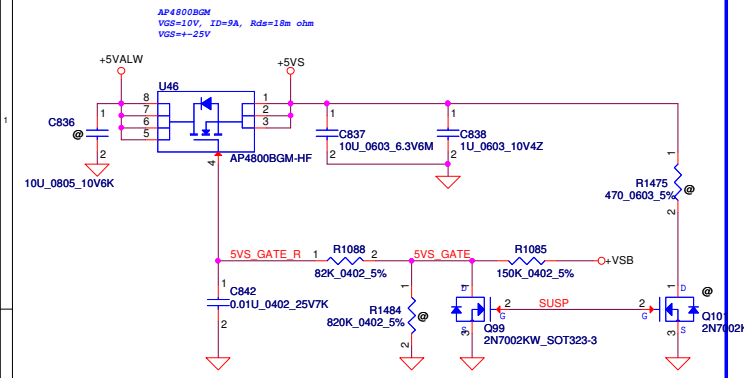

+3VALW to +3VS

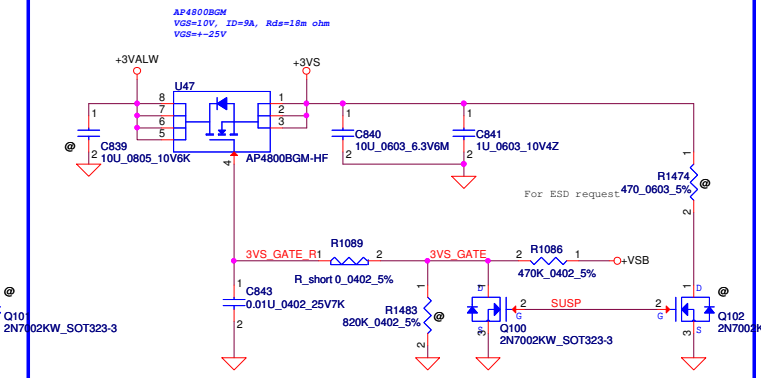

+3VALW to +3V_PCH

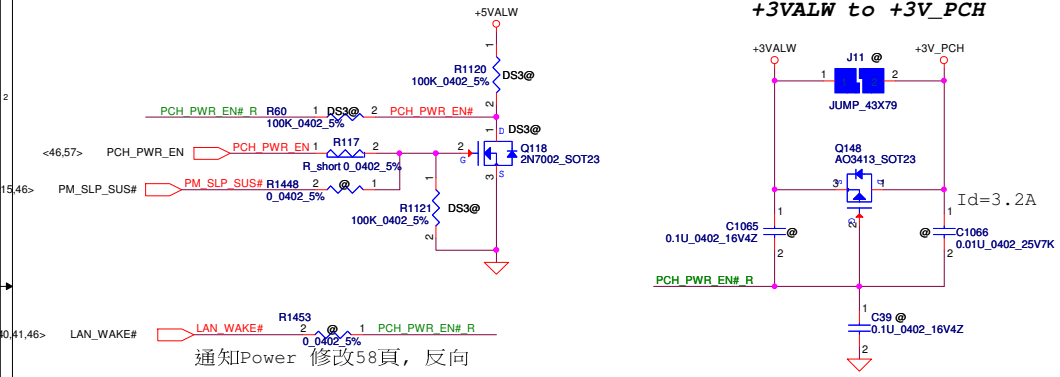

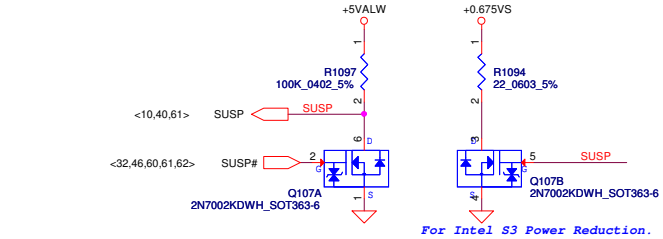

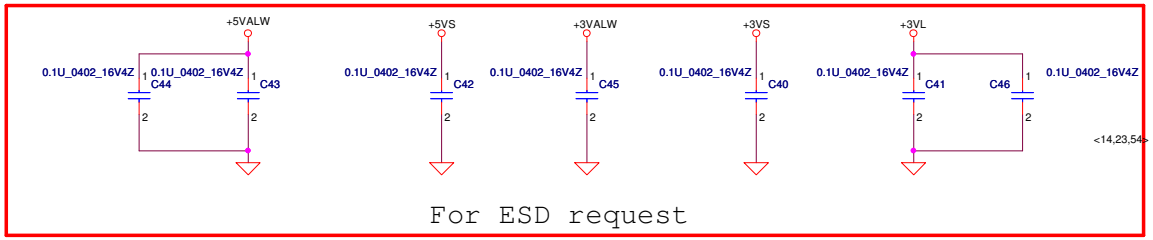

+3VS to +3VS_VGA

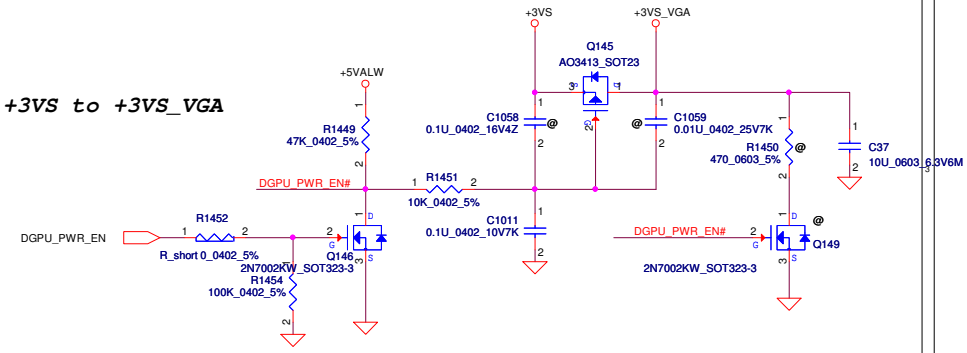

+3VS to +3VS_SLI

2012-0419 --> modify +3VS_SLI BOM structure to "SLI@"

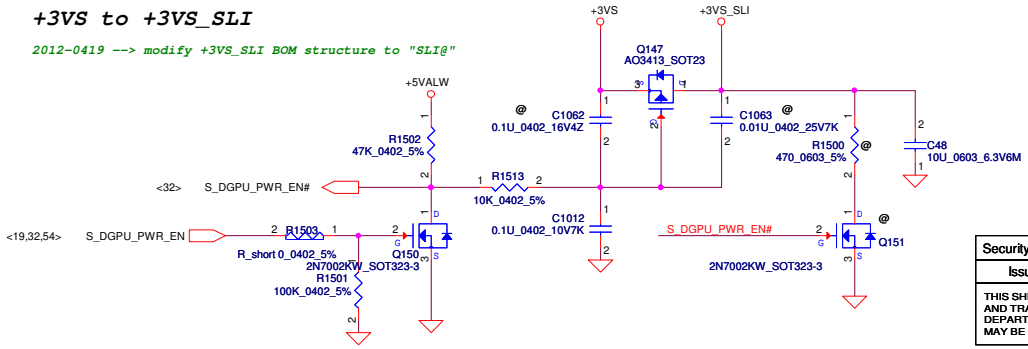

Security Classification	LC Future Center Secret Data		
Issued Date	2012/07/01	Deciphered Date	2014/07/01

THIS SHEET OF ENGINEERING DRAWING IS THE PROPRIETARY PROPERTY OF LC FUTURE CENTER. AND CONTAINS CONFIDENTIAL AND TRADE SECRET INFORMATION. THIS SHEET MAY NOT BE TRANSFERED FROM THE CUSTODY OF THE COMPETENT DIVISION OF R&D, DEPARTMENT EXCEPT AS AUTHORIZED BY LC FUTURE CENTER NEITHER THIS SHEET NOR THE INFORMATION IT CONTAINS MAY BE USED BY OR DISCLOSED TO ANY THIRD PARTY WITHOUT PRIOR WRITTEN CONSENT OF LC FUTURE CENTER.

Title: DC V TO VS INTERFACE

Size: Custom | Document Number: Y501 NM-A032 | Rev: 1.0

Date: Wednesday, March 27, 2013 | Sheet 55 of 69

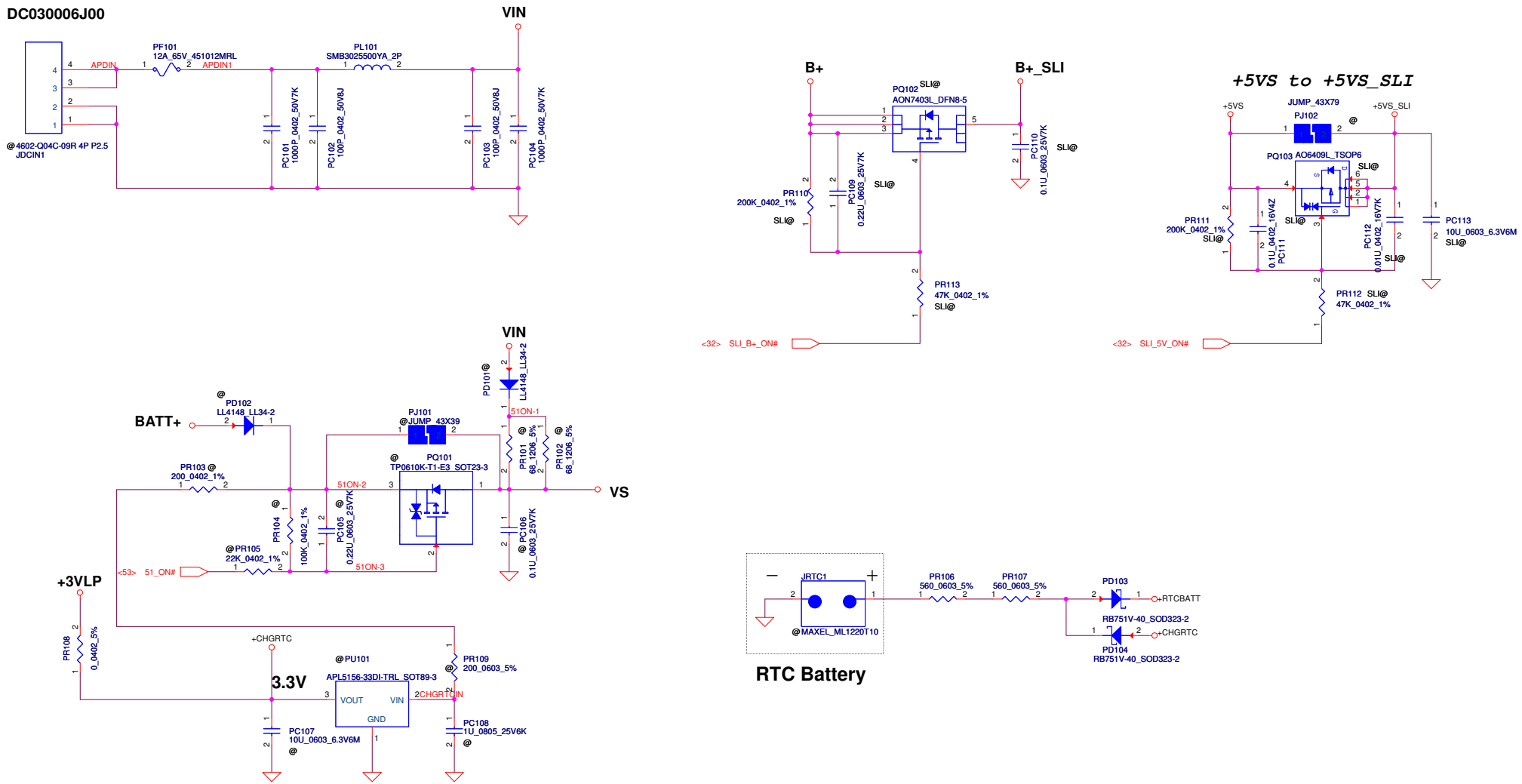

Security Classification	LC Future Center Secret Data		
Issued Date	2012/07/01	Deciphered Date	2014/07/01

THIS SHEET OF ENGINEERING DRAWING IS THE PROPRIETARY PROPERTY OF LC FUTURE CENTER. AND CONTAINS CONFIDENTIAL AND TRADE SECRET INFORMATION. THIS SHEET MAY NOT BE TRANSFERED FROM THE CUSTODY OF THE COMPETENT DIVISION OF R&D DEPARTMENT EXCEPT AS AUTHORIZED BY LC FUTURE CENTER NEITHER THIS SHEET NOR THE INFORMATION IT CONTAINS MAY BE USED BY OR DISCLOSED TO ANY THIRD PARTY WITHOUT PRIOR WRITTEN CONSENT OF LC FUTURE CENTER.

Title: *Vin Detector*

LCFC

Size: Custom | Document Number: *Y510 NM-A032* | Rev: 1.0

Date: Wednesday, March 27, 2013 | Sheet 56 of 69

WWW.AliSaler.Com

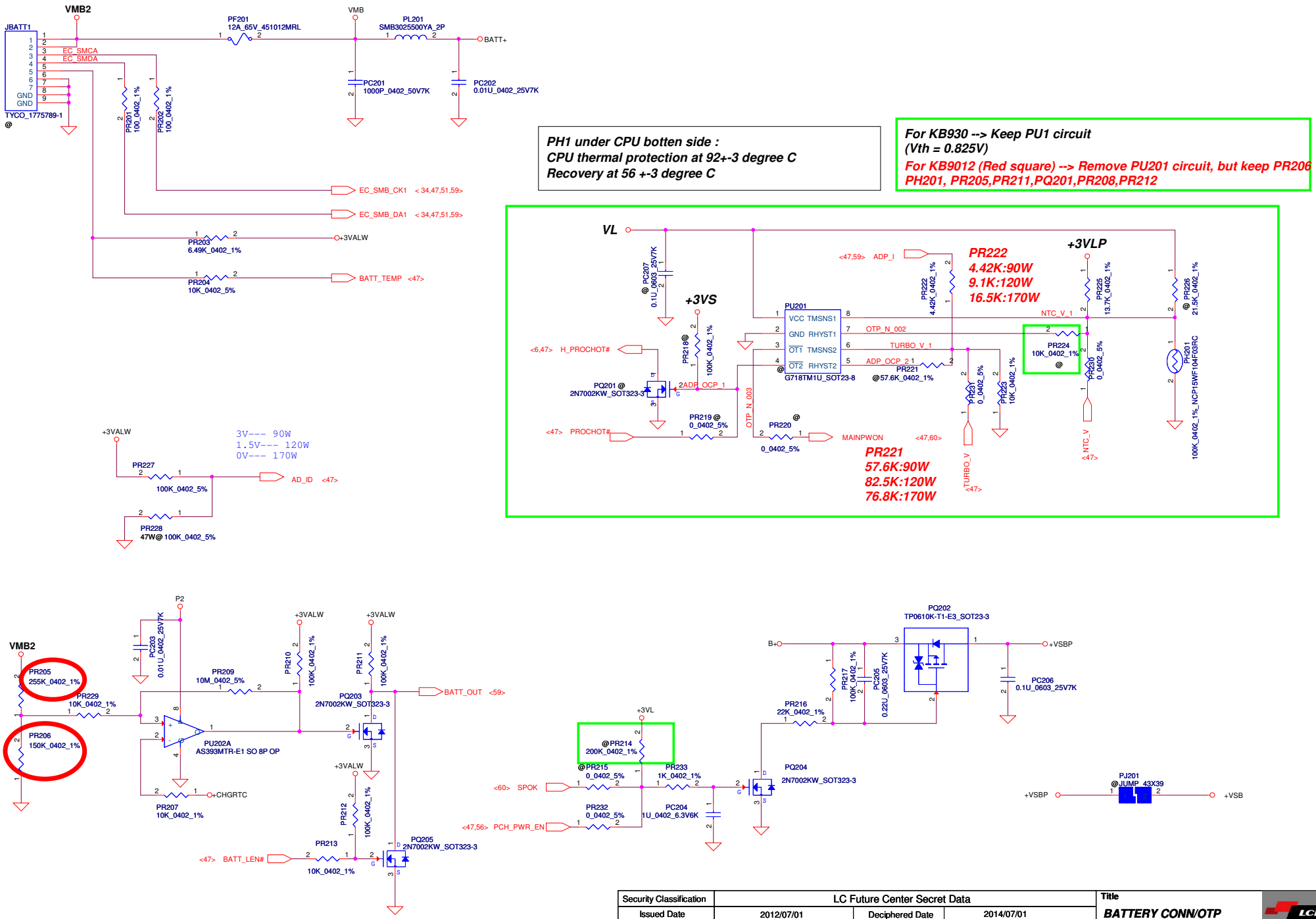

Security Classification	LC Future Center Secret Data		
Issued Date	2012/07/01	Deciphered Date	2014/07/01

THIS SHEET OF ENGINEERING DRAWING IS THE PROPRIETARY PROPERTY OF LC FUTURE CENTER. AND CONTAINS CONFIDENTIAL AND TRADE SECRET INFORMATION. THIS SHEET MAY NOT BE TRANSFERED FROM THE CUSTODY OF THE COMPETENT DIVISION OF R&D DEPARTMENT EXCEPT AS AUTHORIZED BY LC FUTURE CENTER NEITHER THIS SHEET NOR THE INFORMATION IT CONTAINS MAY BE USED BY OR DISCLOSED TO ANY THIRD PARTY WITHOUT PRIOR WRITTEN CONSENT OF LC FUTURE CENTER.

Title: BATTERY CONN/OTP

Size: Custom | Document Number: Y510 NM-A032 | Rev: 1.0

Date: Wednesday, March 27, 2013 | Sheet 57 of 69

Charge Option() bit[8]=1

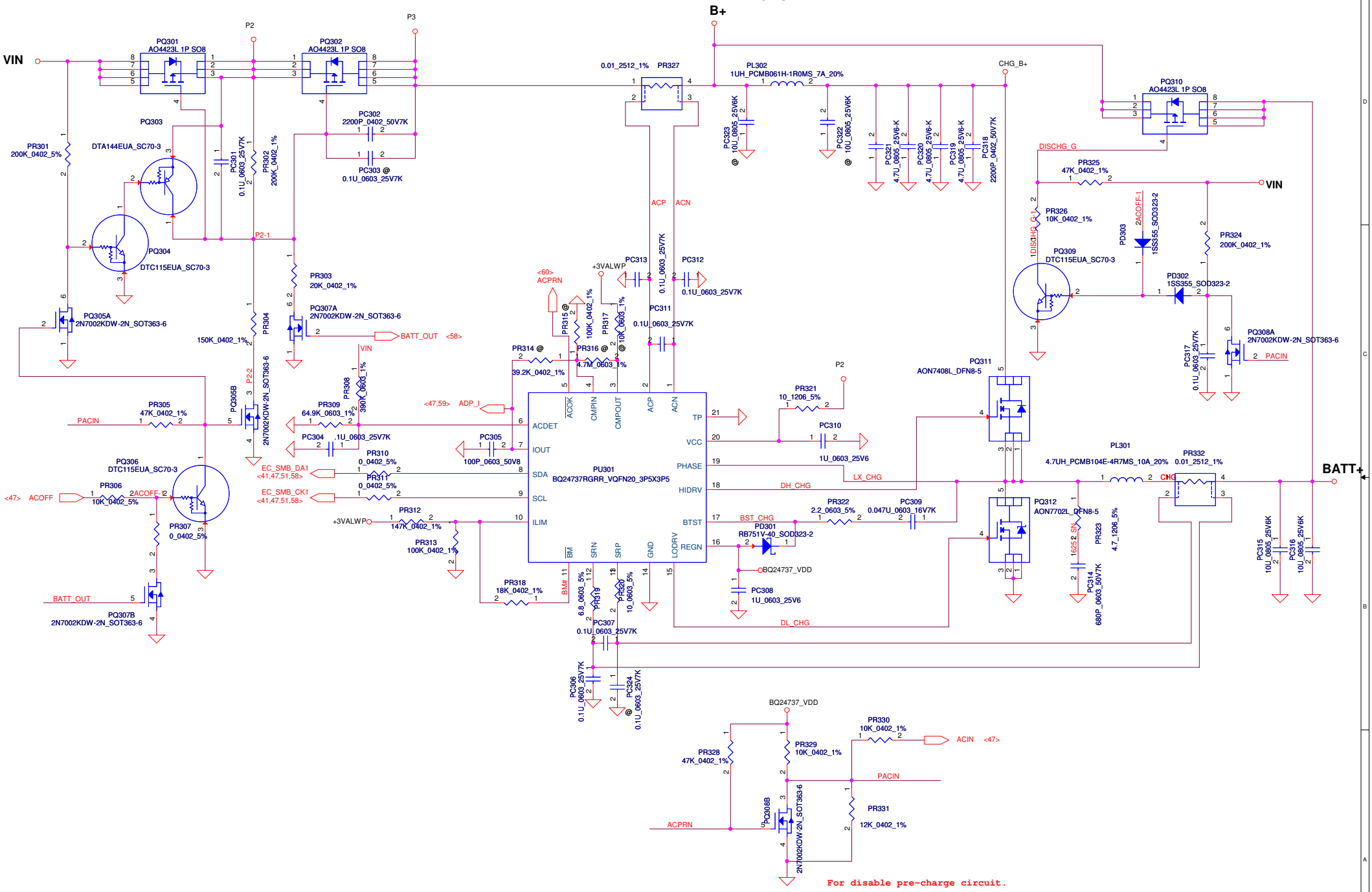

Security Classification	LC Future Center Secret Data		
Issued Date	2012/07/01	Deciphered Date	2014/07/01

THIS SHEET OF ENGINEERING DRAWING IS THE PROPRIETARY PROPERTY OF LC FUTURE CENTER. AND CONTAINS CONFIDENTIAL AND TRADE SECRET INFORMATION. THIS SHEET MAY NOT BE TRANSFERED FROM THE CUSTODY OF THE COMPETENT DIVISION OF R&D DEPARTMENT EXCEPT AS AUTHORIZED BY LC FUTURE CENTER NEITHER THIS SHEET NOR THE INFORMATION IT CONTAINS MAY BE USED BY OR DISCLOSED TO ANY THIRD PARTY WITHOUT PRIOR WRITTEN CONSENT OF LC FUTURE CENTER.

Title: CHARGER

Size: Custom | Document Number: Y510 NM-A032 | Rev: 1.0

Date: Wednesday, March 27, 2013 | Sheet 58 of 69

WWW.AliSaler.Com

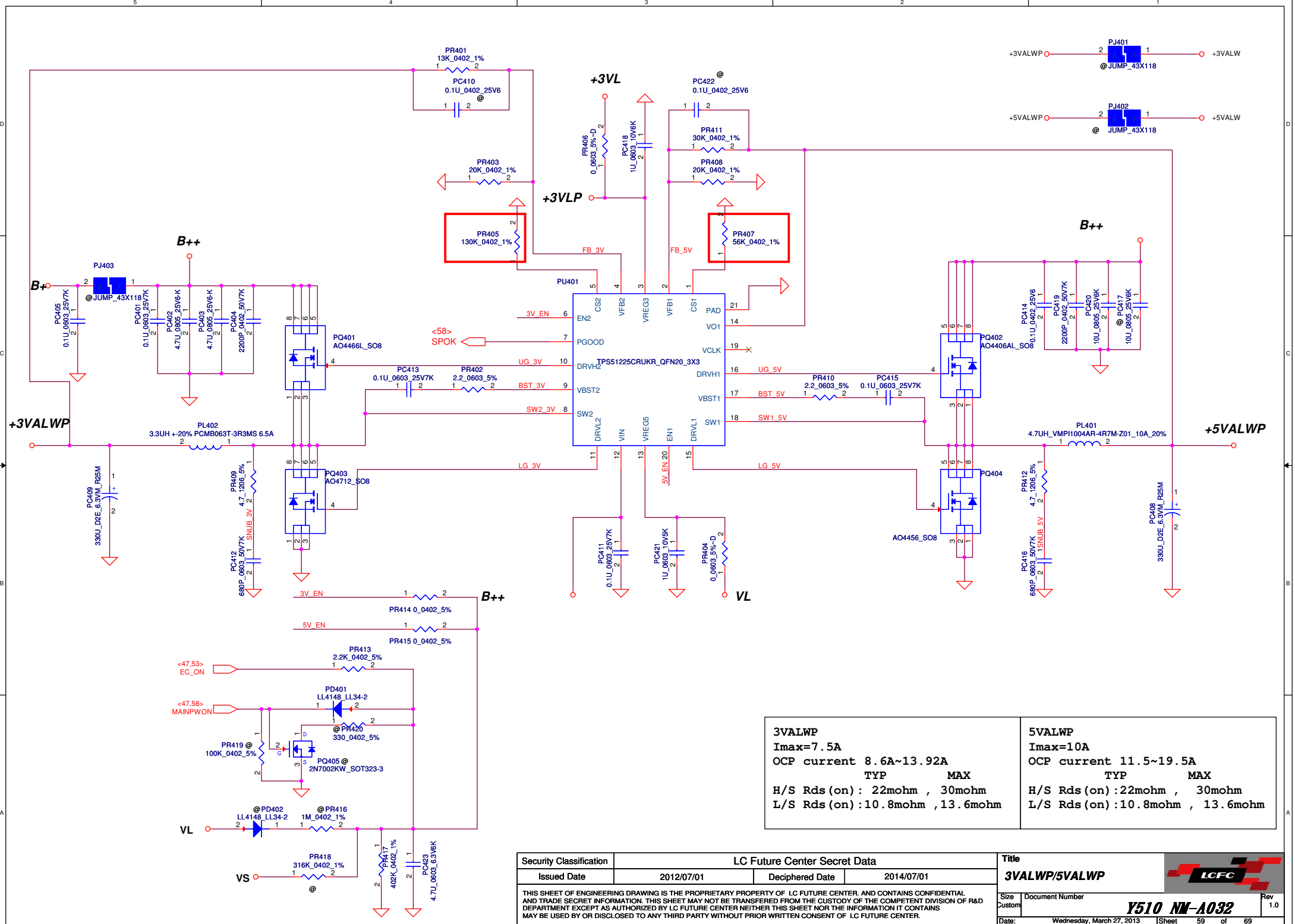

3VALWP	5VALWP
Imax=7.5A	Imax=10A
OCP current 8.6A~13.92A	OCP current 11.5~19.5A
TYP MAX	TYP MAX
H/S Rds(on): 22mohm , 30mohm	H/S Rds(on):22mohm , 30mohm
L/S Rds(on):10.8mohm ,13.6mohm	L/S Rds(on):10.8mohm , 13.6mohm

Security Classification	LC Future Center Secret Data		
Issued Date	2012/07/01	Deciphered Date	2014/07/01

THIS SHEET OF ENGINEERING DRAWING IS THE PROPRIETARY PROPERTY OF LC FUTURE CENTER. AND CONTAINS CONFIDENTIAL AND TRADE SECRET INFORMATION. THIS SHEET MAY NOT BE TRANSFERED FROM THE CUSTODY OF THE COMPETENT DIVISION OF R&D DEPARTMENT EXCEPT AS AUTHORIZED BY LC FUTURE CENTER NEITHER THIS SHEET NOR THE INFORMATION IT CONTAINS MAY BE USED BY OR DISCLOSED TO ANY THIRD PARTY WITHOUT PRIOR WRITTEN CONSENT OF LC FUTURE CENTER.

Title: 3VALWP/5VALWP

Size: Custom | Document Number: Y510 NM-A032 | Rev: 1.0

Date: Wednesday, March 27, 2013 | Sheet 59 of 69

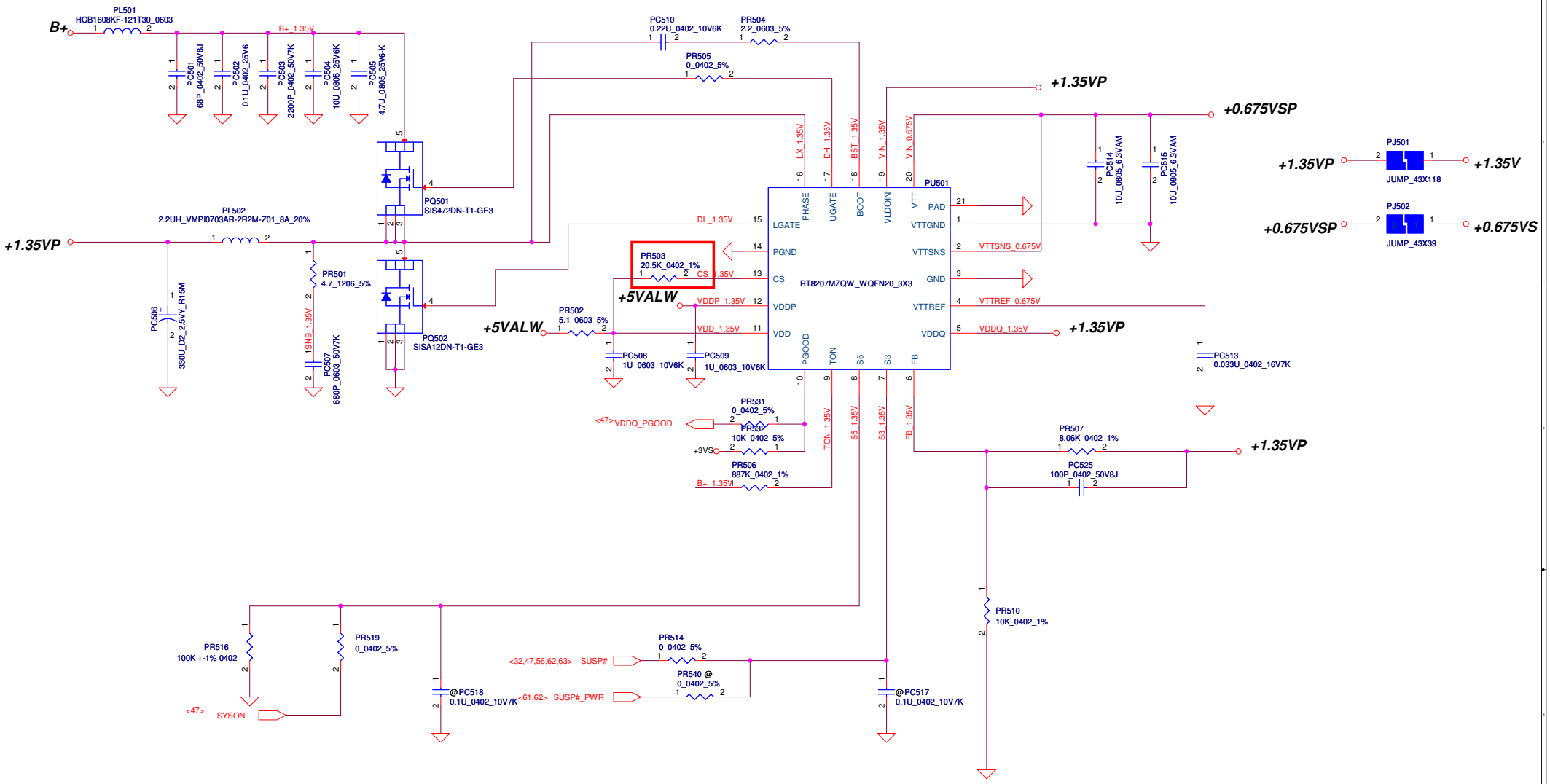

Security Classification	LC Future Center Secret Data		
Issued Date	2012/07/01	Deciphered Date	2014/07/01

THIS SHEET OF ENGINEERING DRAWING IS THE PROPRIETARY PROPERTY OF LC FUTURE CENTER. AND CONTAINS CONFIDENTIAL AND TRADE SECRET INFORMATION. THIS SHEET MAY NOT BE TRANSFERED FROM THE CUSTODY OF THE COMPETENT DIVISION OF R&D DEPARTMENT EXCEPT AS AUTHORIZED BY LC FUTURE CENTER NEITHER THIS SHEET NOR THE INFORMATION IT CONTAINS MAY BE USED BY OR DISCLOSED TO ANY THIRD PARTY WITHOUT PRIOR WRITTEN CONSENT OF LC FUTURE CENTER.

Title: 1.35VP/0.675VSP

Size: Custom | Document Number: Y510 NM-A032 | Rev: 1.0

Date: Wednesday, March 27, 2013 | Sheet 60 of 69

WWW.AliSaler.Com

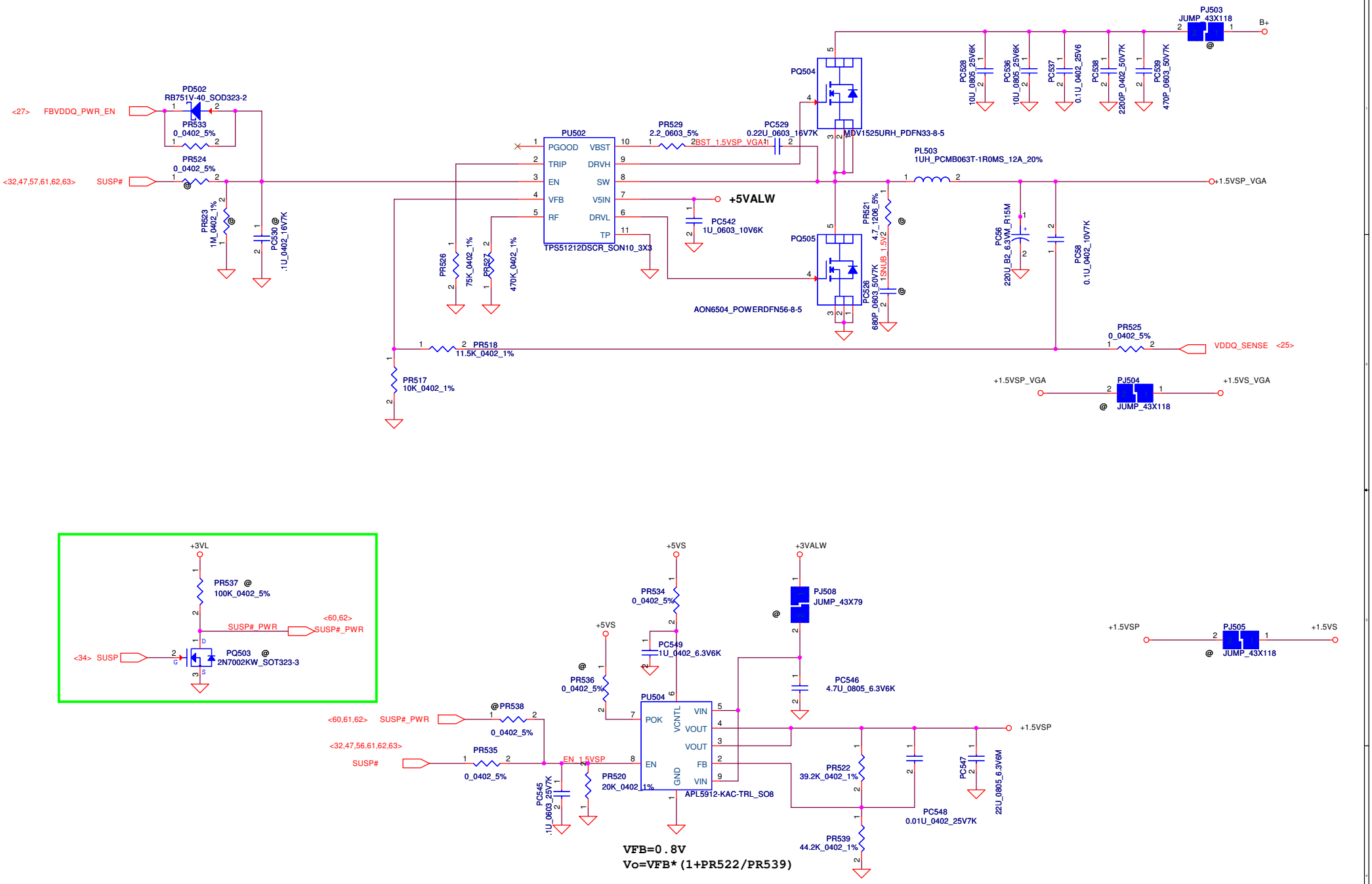

Security Classification	LC Future Center Secret Data		
Issued Date	2012/07/01	Deciphered Date	2014/07/01

THIS SHEET OF ENGINEERING DRAWING IS THE PROPRIETARY PROPERTY OF LC FUTURE CENTER. AND CONTAINS CONFIDENTIAL AND TRADE SECRET INFORMATION. THIS SHEET MAY NOT BE TRANSFERED FROM THE CUSTODY OF THE COMPETENT DIVISION OF R&D DEPARTMENT EXCEPT AS AUTHORIZED BY LC FUTURE CENTER NEITHER THIS SHEET NOR THE INFORMATION IT CONTAINS MAY BE USED BY OR DISCLOSED TO ANY THIRD PARTY WITHOUT PRIOR WRITTEN CONSENT OF LC FUTURE CENTER.

Title: +1.5VS_VGA/+1.5VS

Size: Custom | Document Number: Y510 NM-A032 | Rev: 1.0

Date: Wednesday, March 27, 2013 | Sheet 61 of 69

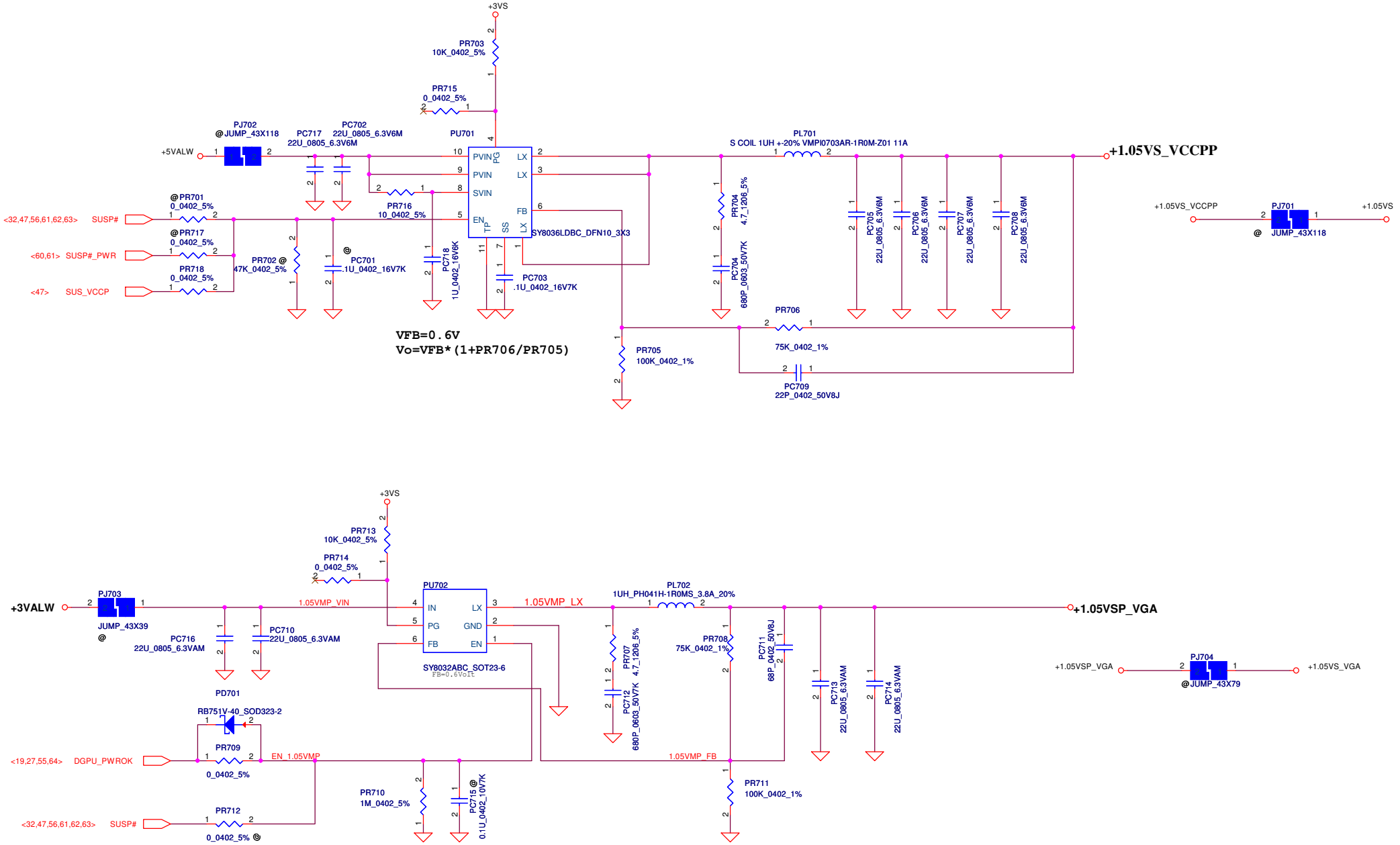

Security Classification	LC Future Center Secret Data		
Issued Date	2012/07/01	Deciphered Date	2014/07/01

THIS SHEET OF ENGINEERING DRAWING IS THE PROPRIETARY PROPERTY OF LC FUTURE CENTER. AND CONTAINS CONFIDENTIAL AND TRADE SECRET INFORMATION. THIS SHEET MAY NOT BE TRANSFERED FROM THE CUSTODY OF THE COMPETENT DIVISION OF R&D DEPARTMENT EXCEPT AS AUTHORIZED BY LC FUTURE CENTER NEITHER THIS SHEET NOR THE INFORMATION IT CONTAINS MAY BE USED BY OR DISCLOSED TO ANY THIRD PARTY WITHOUT PRIOR WRITTEN CONSENT OF LC FUTURE CENTER.

Title: +1.05VS/+1.05VS_VGA

Size: Custom | Document Number: Y510 NM-A032 | Rev: 1.0

Date: Wednesday, March 27, 2013 | Sheet 62 of 69

WWW.AliSaler.Com

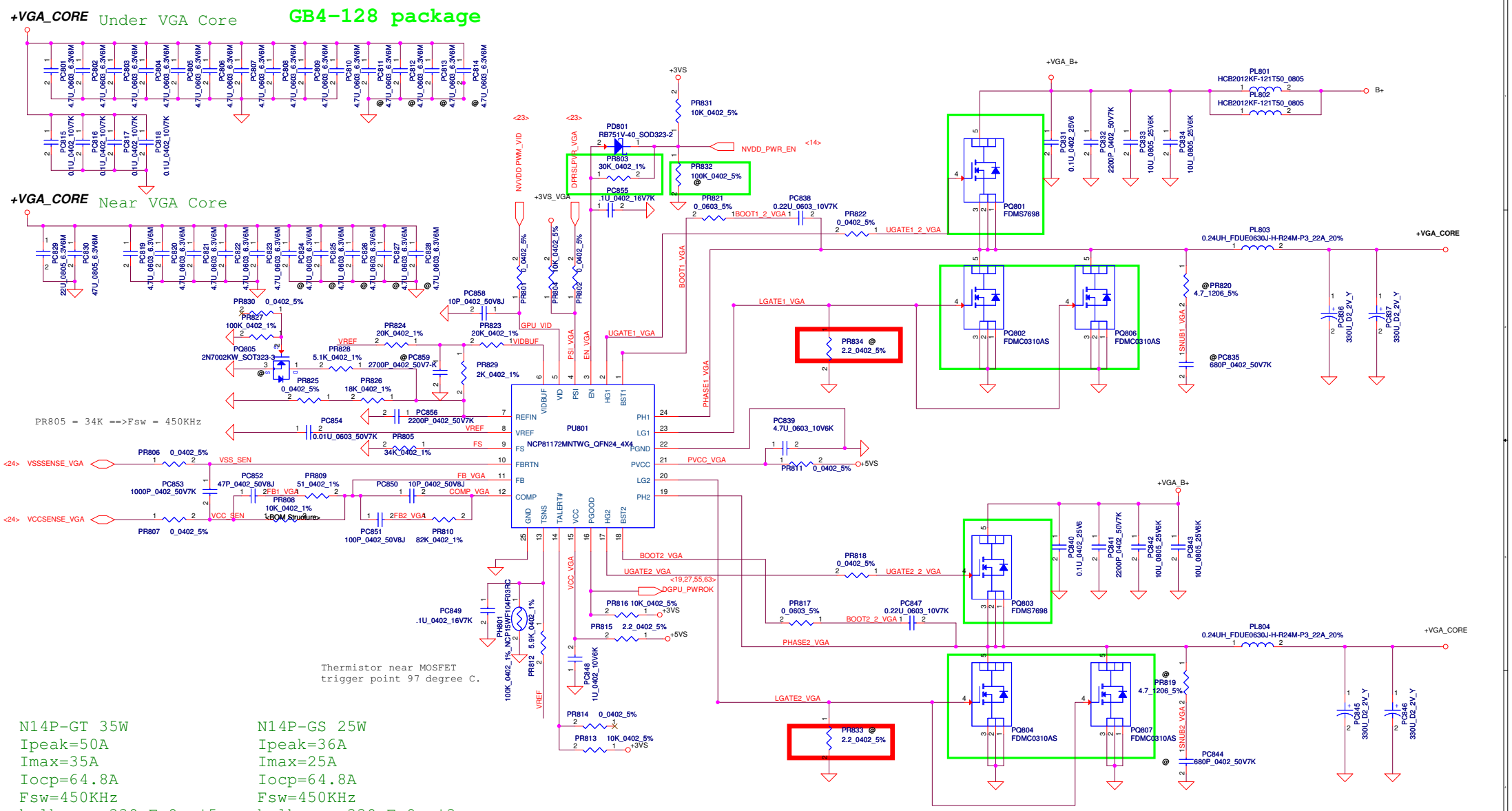

N14P-GT 35W
Ipeak=50A
Imax=35A
Iocp=64.8A
Fsw=450KHz
bulk cap 330uF 9m *5

N14P-GS 25W
Ipeak=36A
Imax=25A
Iocp=64.8A
Fsw=450KHz
bulk cap 330uF 9m *3

Security Classification	LC Future Center Secret Data		
Issued Date	2012/07/01	Deciphered Date	2014/07/01

THIS SHEET OF ENGINEERING DRAWING IS THE PROPRIETARY PROPERTY OF LC FUTURE CENTER. AND CONTAINS CONFIDENTIAL AND TRADE SECRET INFORMATION. THIS SHEET MAY NOT BE TRANSFERED FROM THE CUSTODY OF THE COMPETENT DIVISION OF R&D DEPARTMENT EXCEPT AS AUTHORIZED BY LC FUTURE CENTER NEITHER THIS SHEET NOR THE INFORMATION IT CONTAINS MAY BE USED BY OR DISCLOSED TO ANY THIRD PARTY WITHOUT PRIOR WRITTEN CONSENT OF LC FUTURE CENTER.

Title: VGA_CORE

Size: Custom | Document Number: Y510 NM-A032 | Rev: 1.0

Date: Wednesday, March 27, 2013 | Sheet 63 of 69

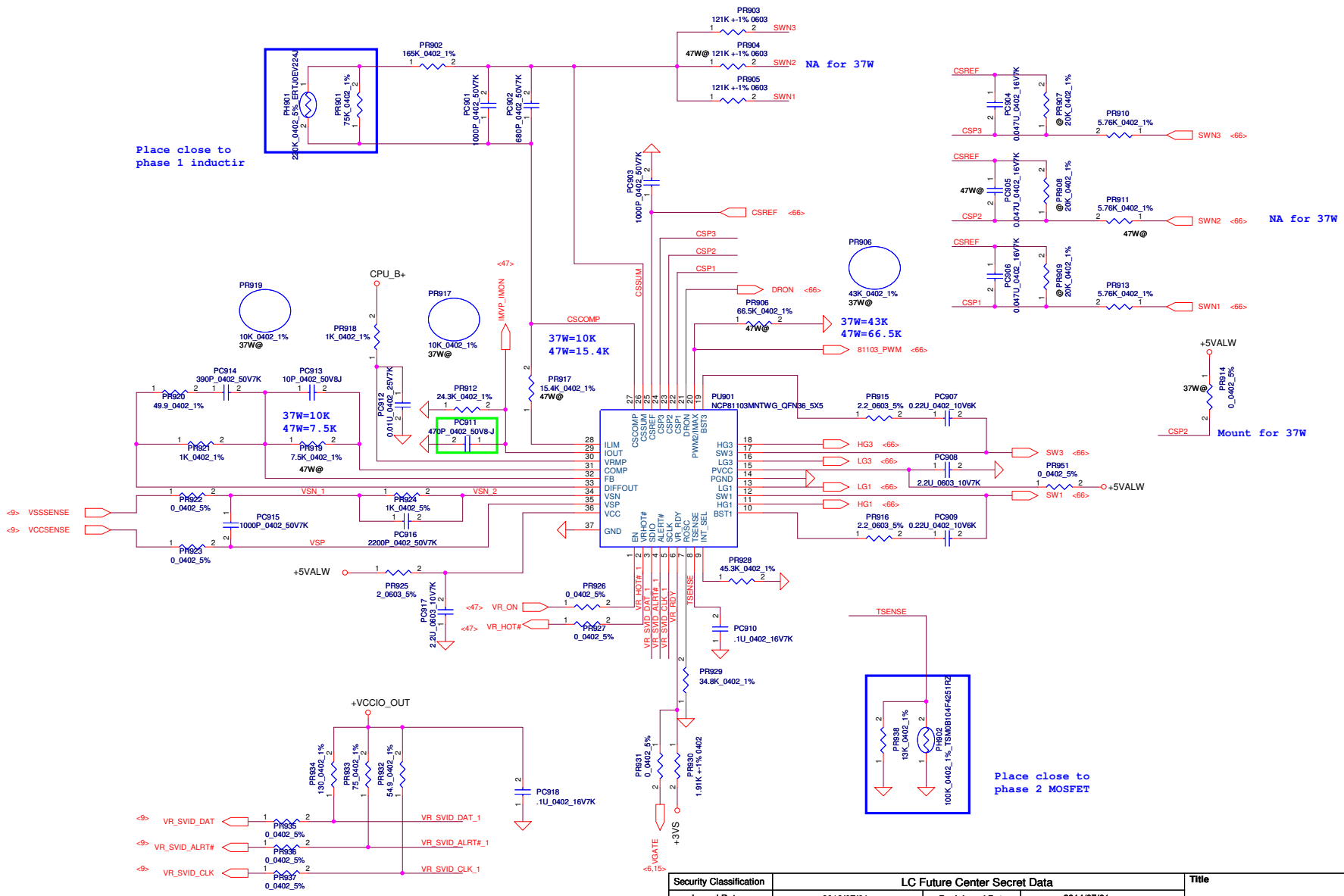

Security Classification	LC Future Center Secret Data		
Issued Date	2012/07/01	Deciphered Date	2014/07/01

THIS SHEET OF ENGINEERING DRAWING IS THE PROPRIETARY PROPERTY OF LC FUTURE CENTER. AND CONTAINS CONFIDENTIAL AND TRADE SECRET INFORMATION. THIS SHEET MAY NOT BE TRANSFERED FROM THE CUSTODY OF THE COMPETENT DIVISION OF R&D DEPARTMENT EXCEPT AS AUTHORIZED BY LC FUTURE CENTER NEITHER THIS SHEET NOR THE INFORMATION IT CONTAINS MAY BE USED BY OR DISCLOSED TO ANY THIRD PARTY WITHOUT PRIOR WRITTEN CONSENT OF LC FUTURE CENTER.

Title: CPU_CORE

Size: Custom | Document Number: Y510 NM-A032 | Rev: 1.0

Date: Wednesday, March 27, 2013 | Sheet 64 of 69

WWW.AliSaler.Com

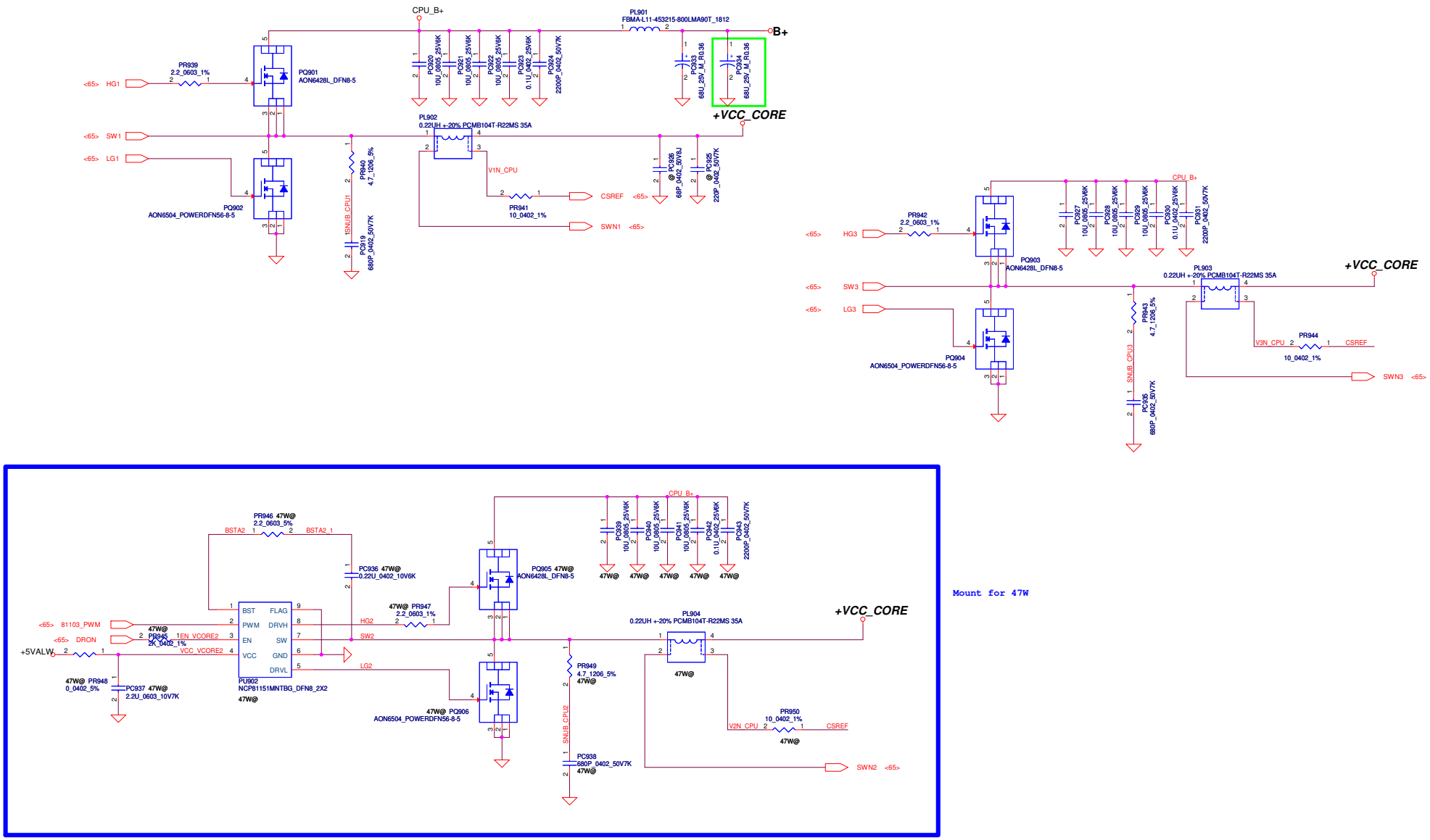

Mount for 47W

Security Classification	LC Future Center Secret Data		
Issued Date	2012/07/01	Deciphered Date	2014/07/01

THIS SHEET OF ENGINEERING DRAWING IS THE PROPRIETARY PROPERTY OF LC FUTURE CENTER. AND CONTAINS CONFIDENTIAL AND TRADE SECRET INFORMATION. THIS SHEET MAY NOT BE TRANSFERED FROM THE CUSTODY OF THE COMPETENT DIVISION OF R&D DEPARTMENT EXCEPT AS AUTHORIZED BY LC FUTURE CENTER NEITHER THIS SHEET NOR THE INFORMATION IT CONTAINS MAY BE USED BY OR DISCLOSED TO ANY THIRD PARTY WITHOUT PRIOR WRITTEN CONSENT OF LC FUTURE CENTER.

Title: CPU_CORE

Size | Document Number: Y510 NM-A032 | Rev 1.0

Date: Wednesday, March 27, 2013 | Sheet 65 of 69

Based on PDDG rev 0.7 Table 5-1.

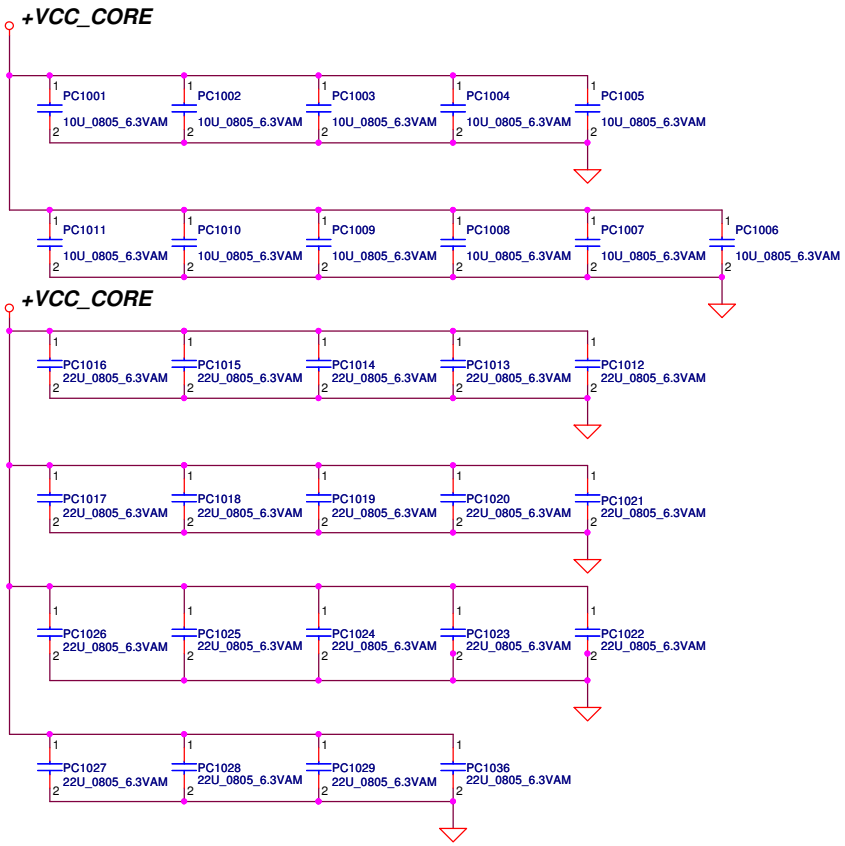

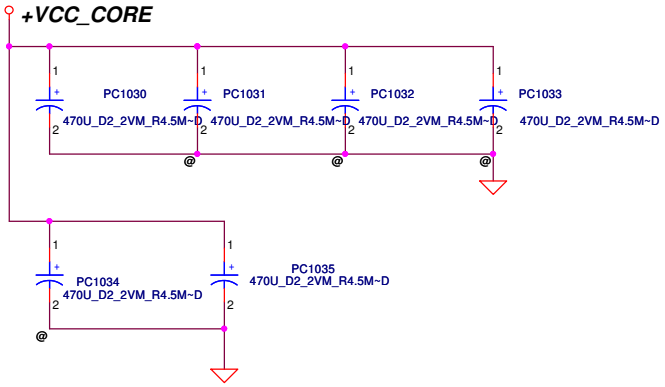

Security Classification	LC Future Center Secret Data		
Issued Date	2012/07/01	Deciphered Date	2014/07/01

THIS SHEET OF ENGINEERING DRAWING IS THE PROPRIETARY PROPERTY OF LC FUTURE CENTER. AND CONTAINS CONFIDENTIAL AND TRADE SECRET INFORMATION. THIS SHEET MAY NOT BE TRANSFERED FROM THE CUSTODY OF THE COMPETENT DIVISION OF R&D DEPARTMENT EXCEPT AS AUTHORIZED BY LC FUTURE CENTER NEITHER THIS SHEET NOR THE INFORMATION IT CONTAINS MAY BE USED BY OR DISCLOSED TO ANY THIRD PARTY WITHOUT PRIOR WRITTEN CONSENT OF LC FUTURE CENTER.

Title: PROCESSOR DECOUPLING

Size: Custom | Document Number: Y510 NM-A032 | Rev: 1.0

Date: Wednesday, March 27, 2013 | Sheet 66 of 69

WWW.AliSaler.Com

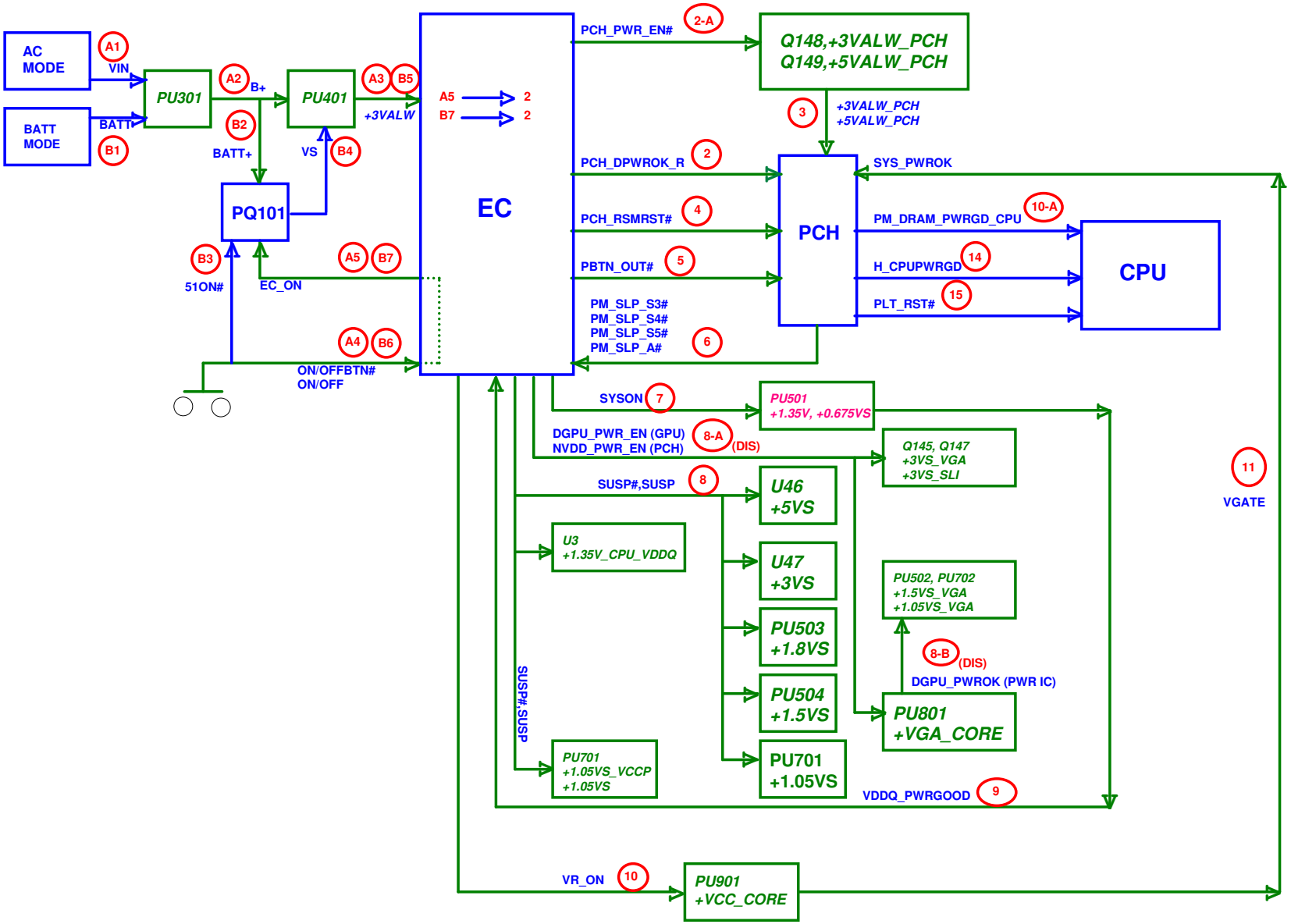

Security Classification	LC Future Center Secret Data		
Issued Date	2012/07/01	Deciphered Date	2014/07/01

THIS SHEET OF ENGINEERING DRAWING IS THE PROPRIETARY PROPERTY OF LC FUTURE CENTER. AND CONTAINS CONFIDENTIAL AND TRADE SECRET INFORMATION. THIS SHEET MAY NOT BE TRANSFERED FROM THE CUSTODY OF THE COMPETENT DIVISION OF R&D DEPARTMENT EXCEPT AS AUTHORIZED BY LC FUTURE CENTER NEITHER THIS SHEET NOR THE INFORMATION IT CONTAINS MAY BE USED BY OR DISCLOSED TO ANY THIRD PARTY WITHOUT PRIOR WRITTEN CONSENT OF LC FUTURE CENTER.

Title: **Power Sequence**

LCFC

Size | Document Number: Y510 NM-A032 | Rev 1.0

Date: Wednesday, March 27, 2013 | Sheet 67 of 69

HW PIR (Product Improve Record)

QIQY5 LA-8691P SCHEMATIC CHANGE LIST
REVISION CHANGE: 0.2
GERBER-OUT DATE: 2012/03/09

NO	DATE	PAGE		MODIFICATION LIST	PURPOSE
01)	03/14	10	R64	Change R64 BOM structure from "@" to "DS3@"	For Deep S3 Function

WWW.AliSaler.Com

Security Classification	LC Future Center Secret Data		
Issued Date	2012/07/01	Deciphered Date	2014/07/01

THIS SHEET OF ENGINEERING DRAWING IS THE PROPRIETARY PROPERTY OF LC FUTURE CENTER. AND CONTAINS CONFIDENTIAL AND TRADE SECRET INFORMATION. THIS SHEET MAY NOT BE TRANSFERED FROM THE CUSTODY OF THE COMPETENT DIVISION OF R&D DEPARTMENT EXCEPT AS AUTHORIZED BY LC FUTURE CENTER NEITHER THIS SHEET NOR THE INFORMATION IT CONTAINS MAY BE USED BY OR DISCLOSED TO ANY THIRD PARTY WITHOUT PRIOR WRITTEN CONSENT OF LC FUTURE CENTER.

Title: HW PIR

Size | Document Number: Y510 NM-A032 | Rev 1.0

Date: Wednesday, March 27, 2013 | Sheet 68 of 69

Version change list (P.I.R. List)

Item	Reason for change	PG#	Modify List	Date	Phase
1					
2					
3					
4					
5					
6					
7					
8					
9					
10					
11					
12					
13					
14					
15					
16					
17					

Security Classification	LC Future Center Secret Data		
Issued Date	2012/07/01	Deciphered Date	2014/07/01

THIS SHEET OF ENGINEERING DRAWING IS THE PROPRIETARY PROPERTY OF LC FUTURE CENTER. AND CONTAINS CONFIDENTIAL AND TRADE SECRET INFORMATION. THIS SHEET MAY NOT BE TRANSFERED FROM THE CUSTODY OF THE COMPETENT DIVISION OF R&D DEPARTMENT EXCEPT AS AUTHORIZED BY LC FUTURE CENTER NEITHER THIS SHEET NOR THE INFORMATION IT CONTAINS MAY BE USED BY OR DISCLOSED TO ANY THIRD PARTY WITHOUT PRIOR WRITTEN CONSENT OF LC FUTURE CENTER.

Title: PWR PIR

LCFC

Size | Document Number: Y510 NM-A032 | Rev 1.0

Date: Wednesday, March 27, 2013 | Sheet 69 of 69